REDSTONE LINEAR BUILT-IN OR INSERT FIREPLACE

Model #:
- ☐ **RS53-LINEAR-V2**
- ☐ **RS62-LINEAR-V2**
- ☐ **RS78-LINEAR-V2**
- ☐ **RS102-LINEAR-V2**

INSTALLATION MANUAL

MODERN FLAMES
ELECTRIC FIREPLACES

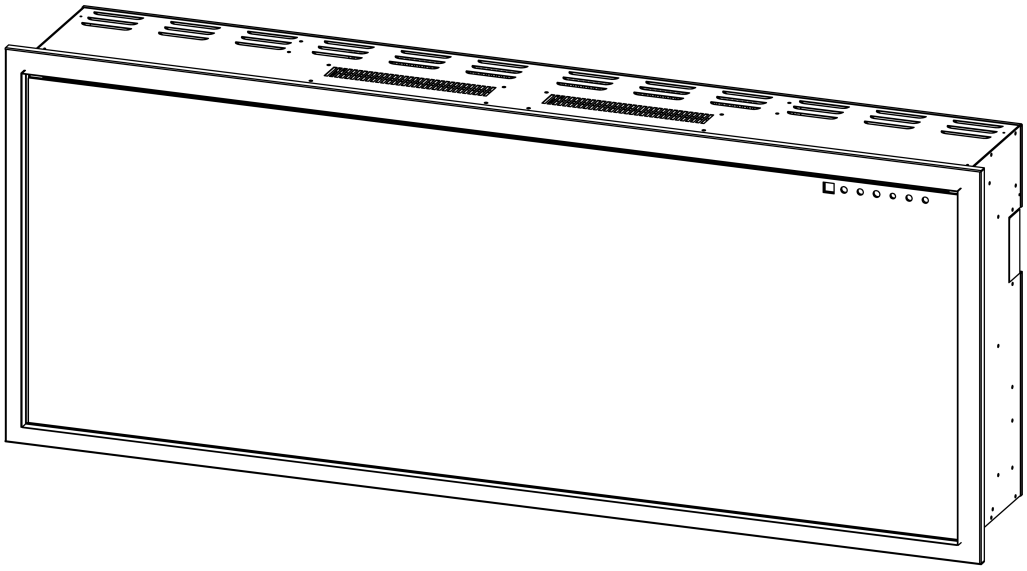

AC 120V 60Hz 1,465W (5,000BTU's)

(2,930W 10,000 BTU's capable)

Read and understand this entire owner's manual, including **all safety information**, before **plugging in** or **using** this product. Failure to do so could result **in fire, electric shock, or serious personal injury.**

Keep this owner's manual for future reference. If you sell or give this product away, **make sure this manual accompanies this product.**

AFFIX SERIAL NUMBER LABEL HERE
FOR FUTURE REFERENCE

C ETL LISTED US
Intertek

IMPORTANT SAFETY INFORMATION!

- Read all instructions before installing or using this heater.
- Use a dedicated 15 amp minimum circuit. A 20 amp circuit is preferred. For 240 V split phase dual-heater operation (10,000 BTU's), use a dedicated 2-pole circuit breaker.
- This heater is hot when in use. To avoid burns, DO NOT let bare skin touch hot surfaces. If provided, use handles when moving this heater. Keep combustible materials, such as furniture, pillows, bedding, papers, clothes, and curtains at least 3 feet (0.9m) from the front of the heater and keep them away from the sides and rear.
- Extreme caution is necessary when any heater is used by or near children or invalids and whenever the heater is left operating and unattended.
- Do not operate any heater if it malfunctions. Disconnect power at service panel and have the heater inspected by a reputable electrician before reusing.
- To disconnect the heater, turn the controls to off, and turn off power to the heater circuit at the main disconnect panel (or operate internal disconnect switch if provided).
- Do not insert or allow foreign objects to enter any ventilation or exhaust opening as this may cause an electric shock, fire, or damage the heater.
- To prevent a possible fire, do not block air intakes or exhaust in any manner.
- A heater has hot arcing or sparking parts inside. Do not use in areas where gasoline, paint, flammable vapors, or liquids are used or stored.
- Use this heater only as described in this manual. Any other use not recommended by the manufacturer may cause fire, electric shock, or injury to persons.
- This heater may include an audible or visual alarm to warn that parts of the heater are getting excessively hot. If the alarm sounds (or illuminates), immediately turn the heater off and inspect for any objects on or adjacent to the heater that may have blocked the airflow or otherwise caused high temperatures to have occurred. DO NOT OPERATE THE HEATER WITH THE ALARM SOUNDING (OR ILLUMINATING).
- ALWAYS plug heaters directly into a wall outlet/receptacle. NEVER use with an extension cord or relocatable power tap (outlet/power strip).
- NEVER use this heater where the heater could fall into a bathtub, pool, become damp, or come in contact with water.
- AVOID FIRE! Regularly inspect all air vents to make sure they are free from dust, lint, or other blockage. Unplug the unit and clean with a vacuum ONLY. DO NOT rinse or get wet.
- ALWAYS mount to wall bracket before use. DO NOT set on the floor, or other surface, to use.
- NEVER use a wall mount bracket from another manufacturer.
- This product is not intended to be a primary heat source. It is for supplemental heat only.

IMPORTANT SAFETY INFORMATION!

- ALWAYS disconnect this unit from the power supply before performing any assembly, cleaning, or before relocating the electric fireplace.
- NEVER leave this heater unattended. ALWAYS unplug this heater when not in use.
- ALWAYS store this heater in a dry location. NEVER use the fireplace if it has become wet.
- NEVER plug this heater into an outlet that is old, cracked, or has loose wires or connections. Plugging this heater into a faulty outlet could result in electric arcing within the outlet that could cause the outlet to overheat or catch fire.
- ALWAYS check your heater cord and plug connections with each use.
    i) MAKE SURE the plug fits tightly in the outlet. Faulty wall outlet connections or loose plugs can cause the outlet to overheat.
    ii) Heaters draw more current than small appliances. Overheating may occur even if it has not occurred with the use of other appliances.
    iii) During use, check frequently to see if the plug outlet or face plate is HOT.
    iv) If the outlet or face plate is HOT, discontinue use immediately and have a qualified electrician inspect and/or replace the faulty outlets.

FCC CAUTION

This device complies with part 15 of the FCC Rules. Operation is subject to the following two conditions: (1) this device may not cause harmful interference, and (2) this device must accept any interference received, including interference that may cause undesired operation.

Any changes or modifications not expressly approved by the party responsible for compliance could void the user's authority to operate the equipment.

NOTE: This equipment has been tested and found to comply with the limits for a Class B digital device, pursuant to Part 15 of the FCC Rules. These limits are designed to provide reasonable protection against harmful interference in a residential installation. This equipment generates, uses and can radiate radio frequency energy and, if not installed and used in accordance with the instructions, may cause harmful interference to radio communications. However, there is no guarantee that interference will not occur in a particular installation.

If this equipment does cause harmful interference to radio or television reception, which can be determined by turning the equipment off and on, the user is encouraged to try to correct the interference by one or more of the following measures:

-- Reorient or relocate the receiving antenna.
-- Increase the separation between the equipment and receiver.
-- Connect the equipment into an outlet on a circuit different from that to which the receiver is connected.
-- Consult the dealer or an experienced radio/TV technician for help.

To maintain compliance with FCC’s RF exposure guidelines, this equipment should be installed and operated with minimum distance between 20cm (8 inches) from the radiator and your body: Use only the supplied antenna.

SAVE THESE INSTRUCTIONS

Table of Contents

Preparation **5**

Parts and Hardware **5**

Dimensions and Specifications **6**

Glass Removal/Installation **7**

Framed Opening **8**

Slide-In Installation **9**

Built-In Installation **11**

Wall Mounted Installation **14**

Hardwiring Installation **16**

Log Set and Crushed Glass Installation **18**

Operation **19**

Operation – Touch Control Panel **23**

Operation – Remote Control **24**

Download Smart Phone App **28**

Wi-Fi – Initial Log-in **29**

Auto Scan **30**

Manual Connect **33**

Smart Device App **36**

Operation – Important Warnings **37**

Care – Cleaning **38**

Replacement Parts List **39**

Preparation

This product includes a GLASS panel. Always use extreme caution when handling glass. Failure to do so could result in personal injury or property damage.

Remove all parts and hardware from the carton and place them on a clean, soft, dry surface. Check the parts list to make sure nothing is missing. Dispose of packaging materials properly. Please recycle whenever possible.

You will need the following tools (not included): Phillips screwdriver, stud finder, level, tape measure, electric drill, 1/4” wood drill bit, hammer.

Parts and Hardware

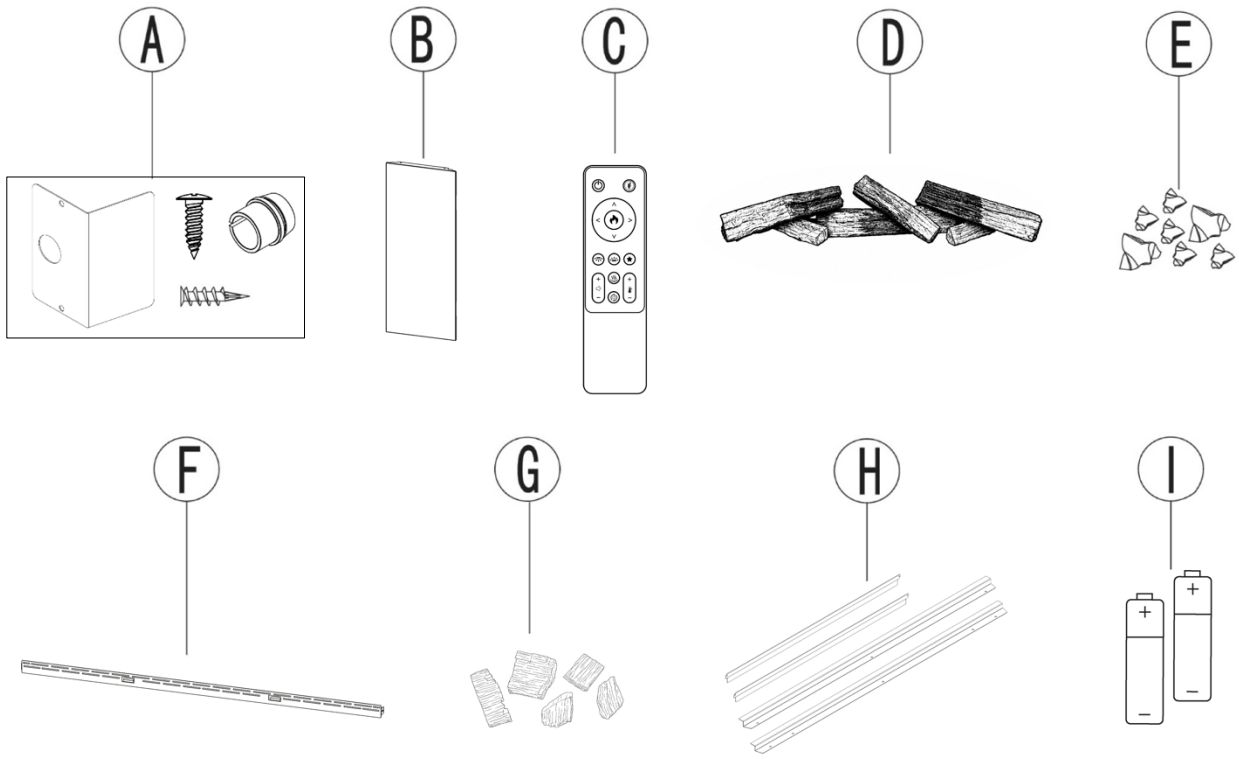

PART NO.	DESCRIPTION
A	Hardware Kit
B	Side Skirt Panel
C	Remote
D	Lit Log Set
E	Crushed Glass Media

PART NO.	DESCRIPTION
F	Wall Mount Bracket
G	Twigs
H	Built-In Trim Kit
I	AAA Batteries

Dimensions and Specifications

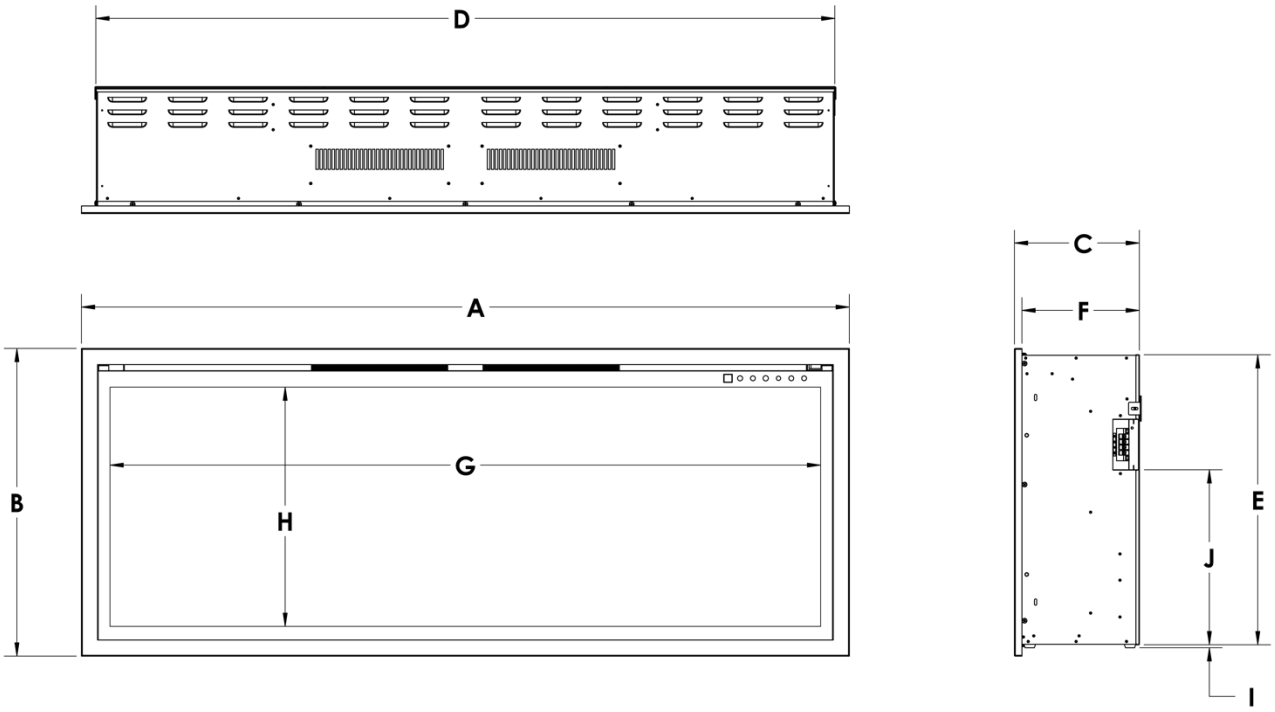

PRODUCT DIMENSIONS						
Model Number	**A**	**B**	**C**	**D**	**E**	**F**
RS53-LINEAR-V2	53-1/2" 1359mm	24" 610mm	9-7/8" 251mm	51-3/8" 1305mm	22-5/8" 575mm	9-5/16" 236mm
RS62-LINEAR-V2	62" 1575mm	24" 610mm	9-7/8" 251mm	59-7/8" 1521mm	22-5/8" 575mm	9-5/16" 236mm
RS78-LINEAR-V2	77-3/4" 1975mm	24" 610mm	9-7/8" 251mm	75-5/8" 1921mm	22-5/8" 575mm	9-5/16" 236mm
RS102-LINEAR-V2	102-1/16" 2593mm	24" 610mm	9-7/8" 251mm	99-15/16" 2539mm	22-5/8" 575mm	9-5/16" 236mm

PRODUCT DIMENSIONS				
Model Number	**G**	**H**	**I**	**J**
RS53-LINEAR-V2	49" 1245mm	18-11/16" 475mm	1/4" TO 1-1/4" 6mm TO 31mm	13-11/16" 347mm
RS62-LINEAR-V2	57-1/2" 1461mm	18-11/16" 475mm	1/4" TO 1-1/4" 6mm TO 31mm	13-11/16" 347mm
RS78-LINEAR-V2	73-1/4" 1861mm	18-11/16" 475mm	1/4" TO 1-1/4" 6mm TO 31mm	13-11/16" 347mm
RS102-LINEAR-V2	97-5/8" 2479mm	18-11/16" 475mm	1/4" TO 1-1/4" 6mm TO 31mm	13-11/16" 347mm

Glass Removal/Installation

Removing Front Glass

- With one hand on the front glass to prevent it from falling, remove the two screws (one per side) from the underside of the viewing area of the fireplace (Fig. 1-1). Set the screws aside.
- Carefully tilt the top edge of the glass away from the appliance (Fig. 1-2). Once the top edge of the glass is free from the fireplace, lift up on the glass to fully remove it. Place the glass on a soft, non-abrasive surface.
- Reverse these steps to re-install the front glass.

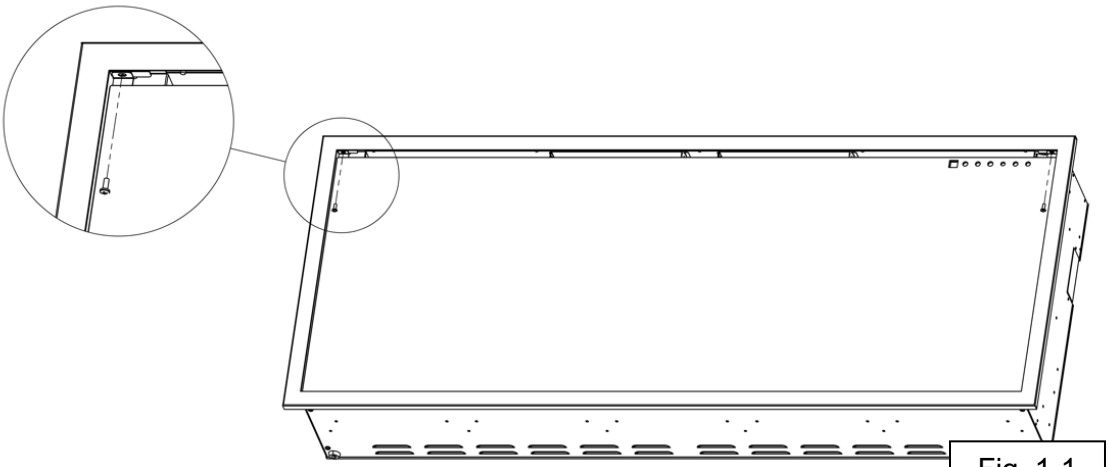

Fig. 1-1

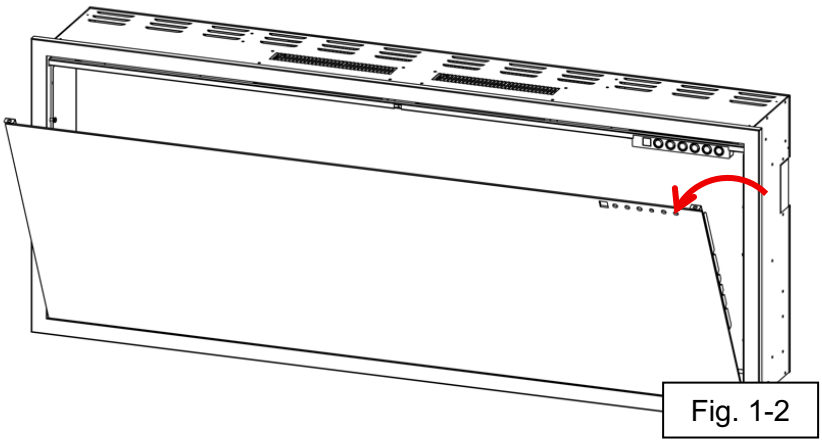

Fig. 1-2

Framed Opening

Note: Due to different materials used on different walls, it is highly recommended for you to consult with your local builder before you install this electric fireplace.

- Select a location that is not prone to moisture and is located at least 36” (914mm) away from combustible materials such as curtain drapes, furniture, bedding, paper, etc.
- Measure the appliance and create a rough-in frame with electrical (see “Rough Opening Framing Dimensions”). Electrical to be at the top right of the rough-in framing.

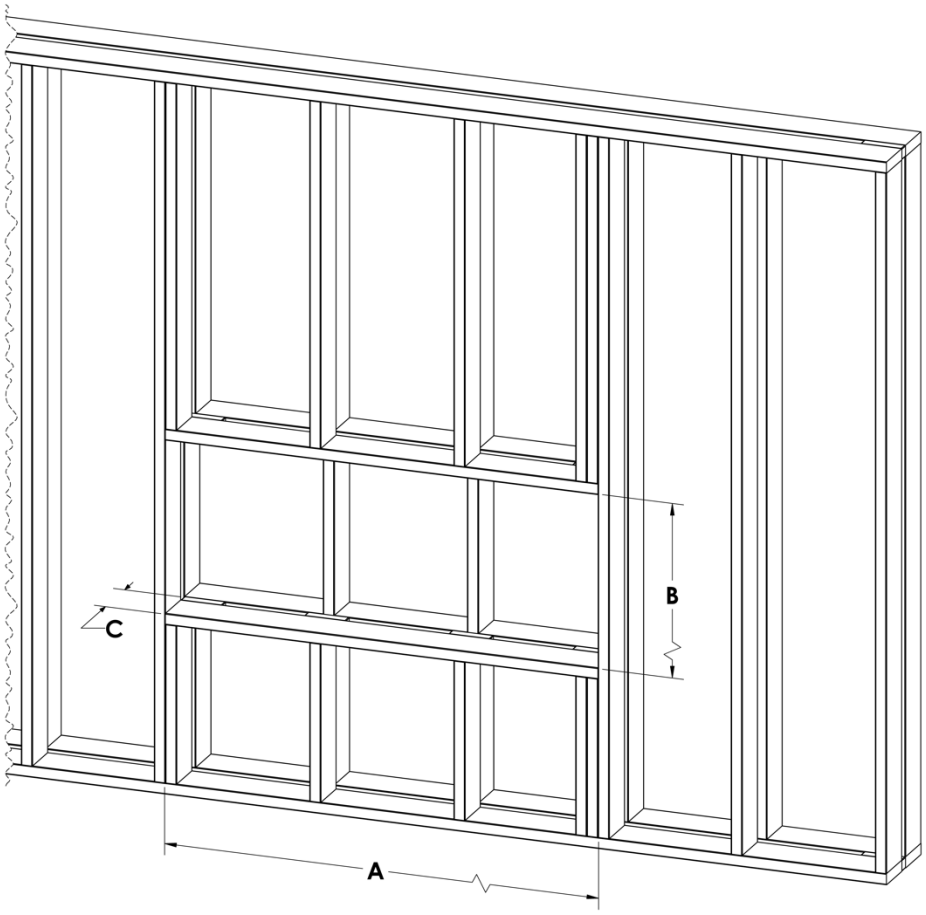

ROUGH OPENING FRAMING DIMENSIONS			
Model Number	**A**	**B**	**C**
RS53-LINEAR-V2	51-5/8" 1311mm	22-7/8" 581mm	9-9/16" 243mm
RS62-LINEAR-V2	60-1/8" 1527mm	22-7/8" 581mm	9-9/16" 243mm
RS78-LINEAR-V2	75-7/8" 1927mm	22-7/8" 581mm	9-9/16" 243mm
RS102- LINEAR-V2	100-3/16" 2545mm	22-7/8" 581mm	9-9/16" 243mm

Slide-In Installation

A Slide-In installation is when the fireplace is installed after the install location is finished. Example, once drywall has been finished and painted.

- Prepare the finished framed opening according to the “Rough Opening Framing Dimensions” chart. Ensure an appropriate dedicated power circuit is provided at the top right of the framed opening.
- Remove the front glass. See “Glass Removal/Installation”.
- Remove the four screws (two per side) from the inside of the appliance and remove the interior walls. (Fig. 2-1). Set the screws and walls aside.

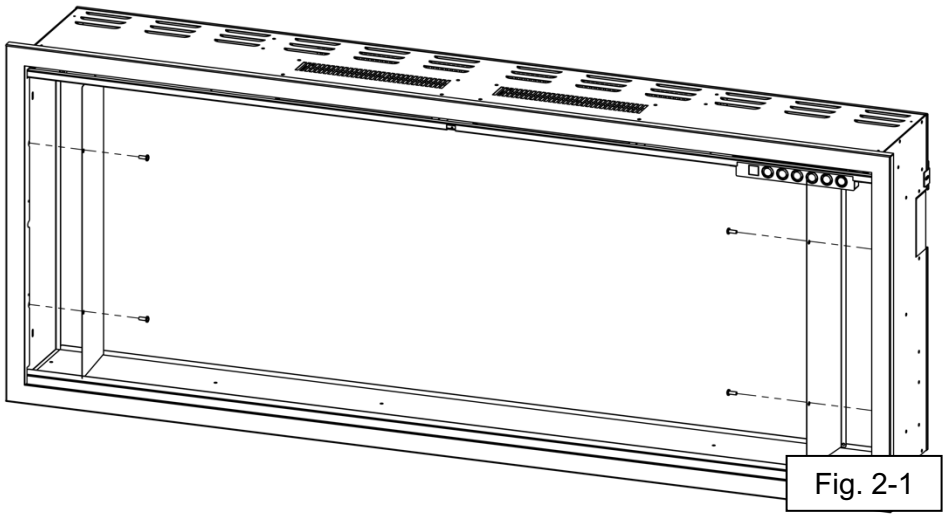

Fig. 2-1

- Remove the power cord and hardwire the fireplace to the main power supply in accordance with local electrical codes (see “Hardwiring Installation” section).

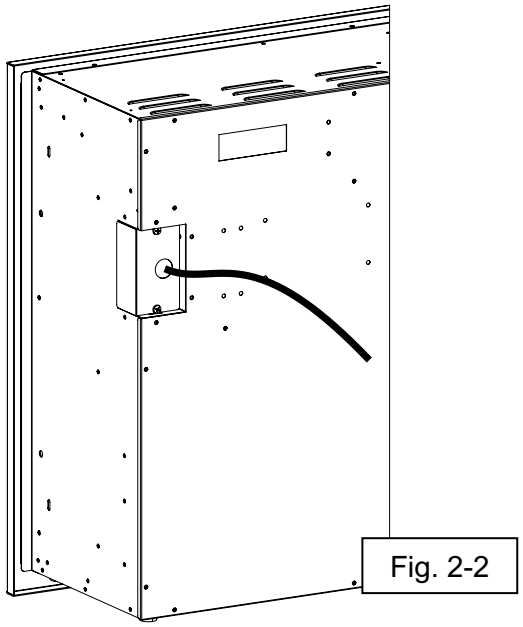

Fig. 2-2

Slide-In Installation (Continued)

- Install the appliance into the prepared opening and then secure it by installing four mounting screws supplied in hardware kit (A) into the slots on the inside of the fireplace (two per side) (Fig. 3-1).
- Reinstall the two interior walls and the four screws previously removed. (Fig. 3-2).
- Decorate according to the media installation guide. See “Log Set and Crushed Glass Installation.”
- Install the front glass. See “Glass Removal/Installation.”

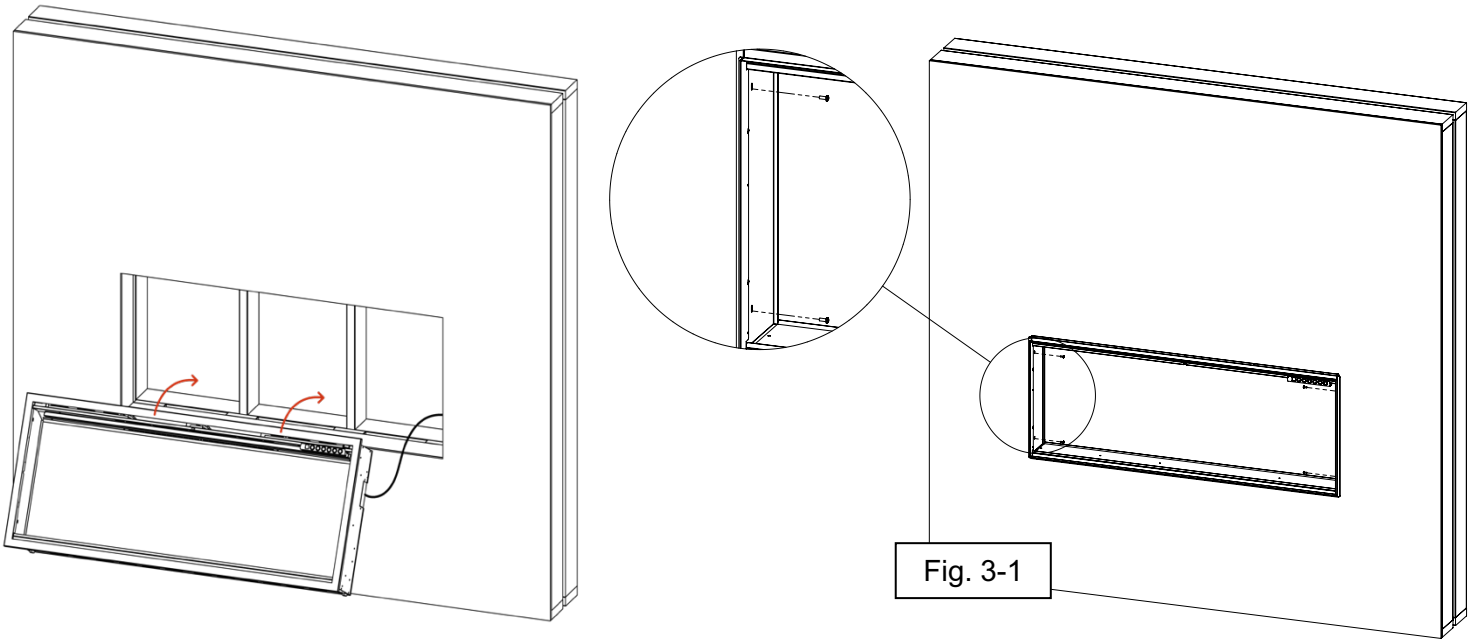

Fig. 3-1

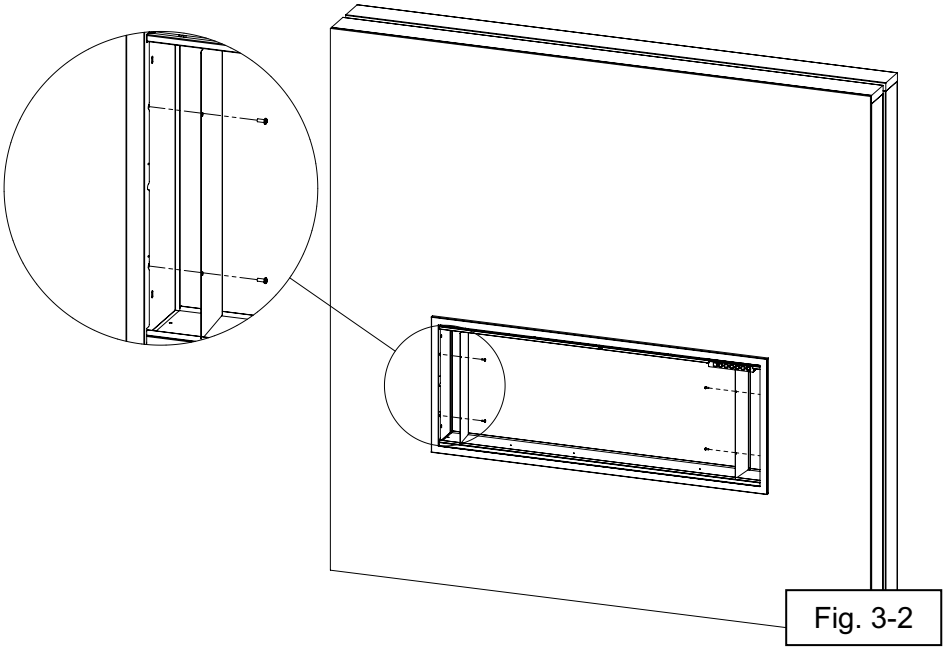

Fig. 3-2

Built-In Installation

A Built-In installation is when the fireplace is installed during the framing stage. The finishing material can be built up to the edge of the standard fireplace trim or the fireplace trim can be replaced with the built-in trim kit for a clean face finish. See built-in preparation on page 12.

- Prepare the framed opening according to the “Rough Opening Framing Dimensions” chart. Ensure an appropriate dedicated power circuit is provided at the top right of the framed opening.
- Remove the front glass. See “Glass Removal/Installation.”
- Remove the four screws (two per side) from the inside of the appliance and remove the interior walls.
  (Fig. 4-1). Set the screws and walls aside.

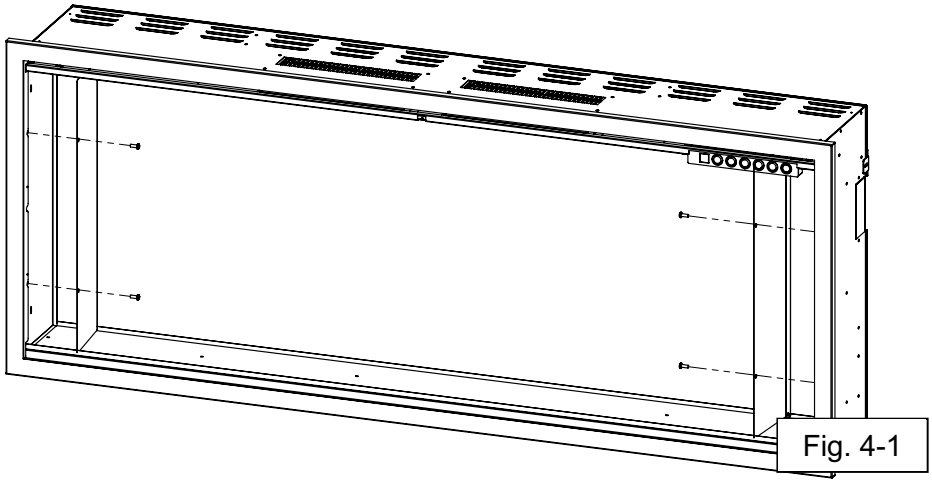

Fig. 4-1

- If installing built-in trim kit proceed to page 12. If installing to existing framing continue to next step on page 13.

Built-In Installation (Continued)

Prepare the fireplace for built-in installation.

- Begin by removing the slide-in frame. It is secured by screws around the perimeter of the frame. Fig. 4-2) The quantity of screws varies depending on the size of the fireplace. Secure screws as they will be reused.
- Once the screws are removed the frame will simply slide off by pulling away from the fireplace.

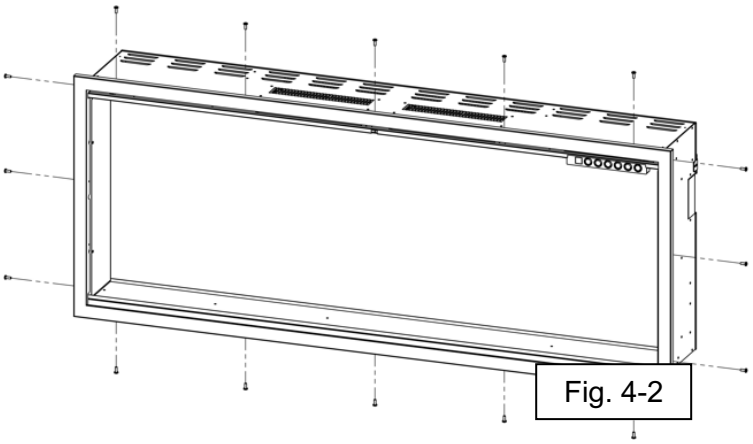

Fig. 4-2

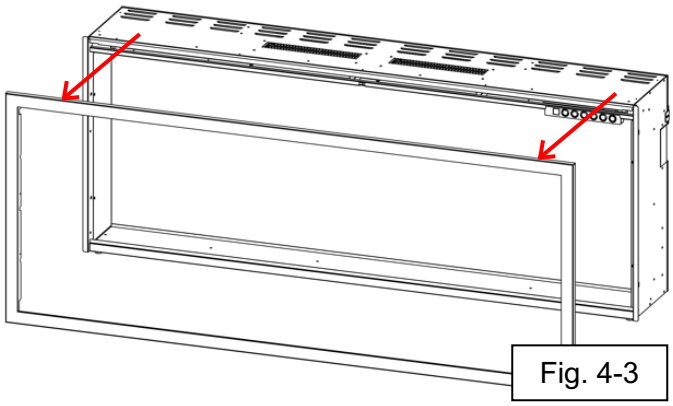

Fig. 4-3

- Install the Built-In frame (H) and attach with the screws previously removed (Fig. 4-4 and Fig. 4-5)

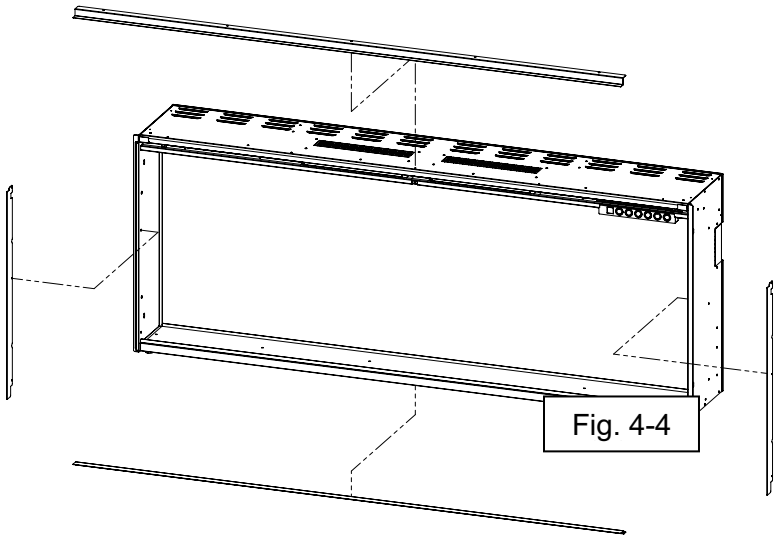

Fig. 4-4

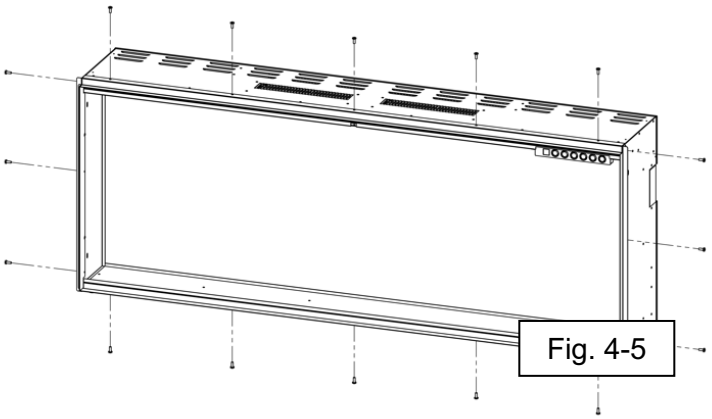

Fig. 4-5

- Remove the power cord.
- The fireplace has now been prepared for a built-in installation.

Built-In Installation (Continued)

- Hardwire the fireplace to the main power supply in accordance with local electrical codes (see “Hardwiring Installation” section).
- Insert the appliance in the opening (See “Rough Opening Framing Dimensions”) (Fig. 4-6) and then secure it by installing 4 screws (A) into the slots on the inside of the fireplace (Fig. 4-7).

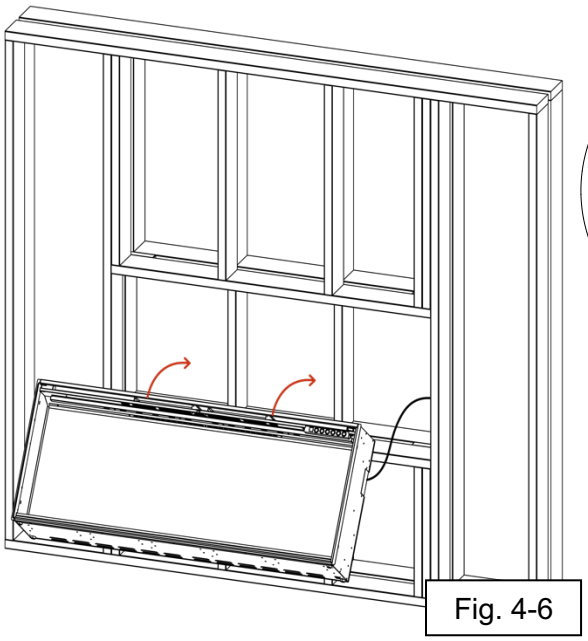

Fig. 4-6

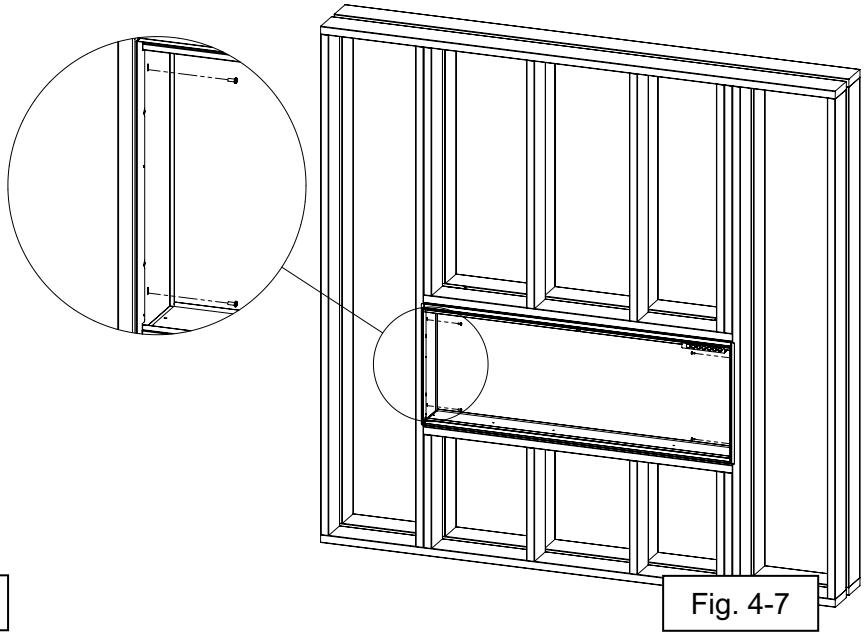

Fig. 4-7

- Reinstall the two interior walls and four screws previously removed.

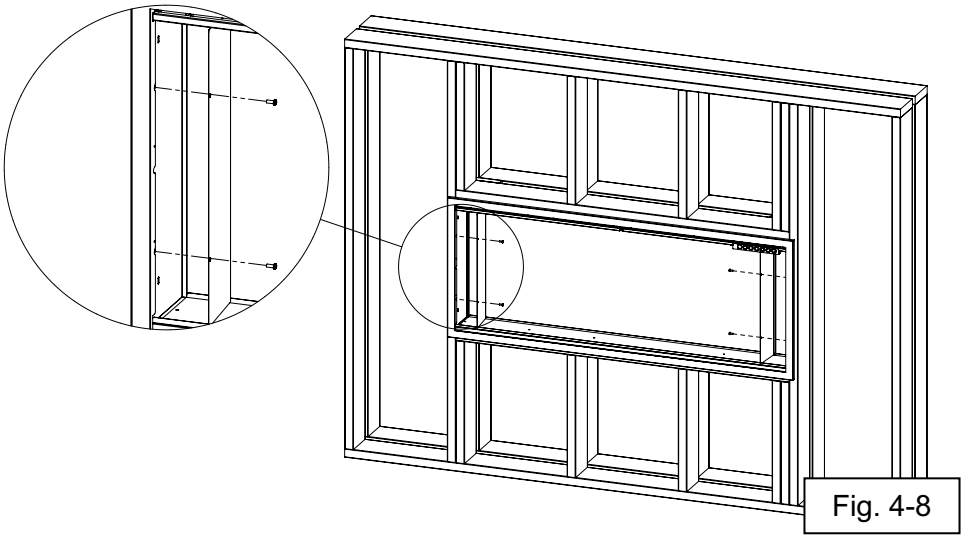

Fig. 4-8

- Mask the exposed viewing area of the fireplace prior to texturing/finalizing the framed wall.
- Decorate according to the media installation guide. See “Log Set and Crushed Glass Installation”.
- Install the front glass. See “Glass Removal/Installation”.

Wall Mounted Installation

- Measure the appliance and select a suitable location. Ensure power will be easily accessible or the outlet will need to be moved as necessary.
- Mark the wall to determine the final location.
- Locate the wall mounting bracket (F) from the package.
- After a suitable location has been selected for wall mounting, locate the wall studs. The wall bracket must be able to secure to a minimum of two studs for proper installation.
- Using the wall bracket as a guide, mark the mounting hole locations.
- Ensure the bracket has the hooks facing upward and that it is level.

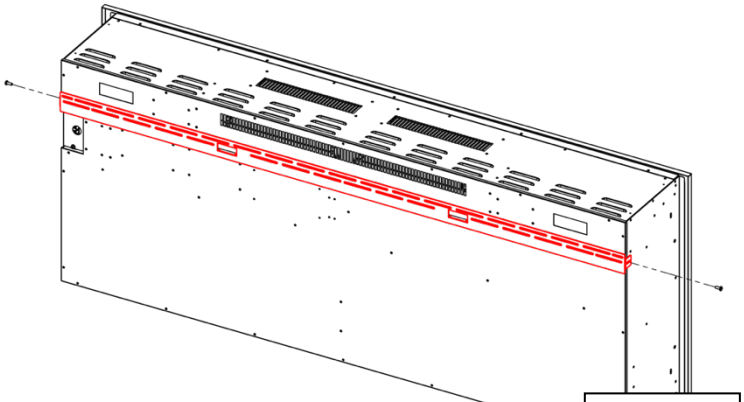

Fig. 5-1

- Additional support is provided by using the included wall anchors (A) between the studs.
- The additional wall anchors must be installed prior to the wall bracket being mounted.
  - To install additional wall anchors, pre-drill (optional) all locations with a ¼" drill bit.
  - Install the wall anchors with a Phillips tip screwdriver. Do not use a drill to avoid over torquing.
- Install the wall bracket to the studs using #8 – 1-5/8" screws and to the wall anchors with #8 – 1" screws from the hardware kit.

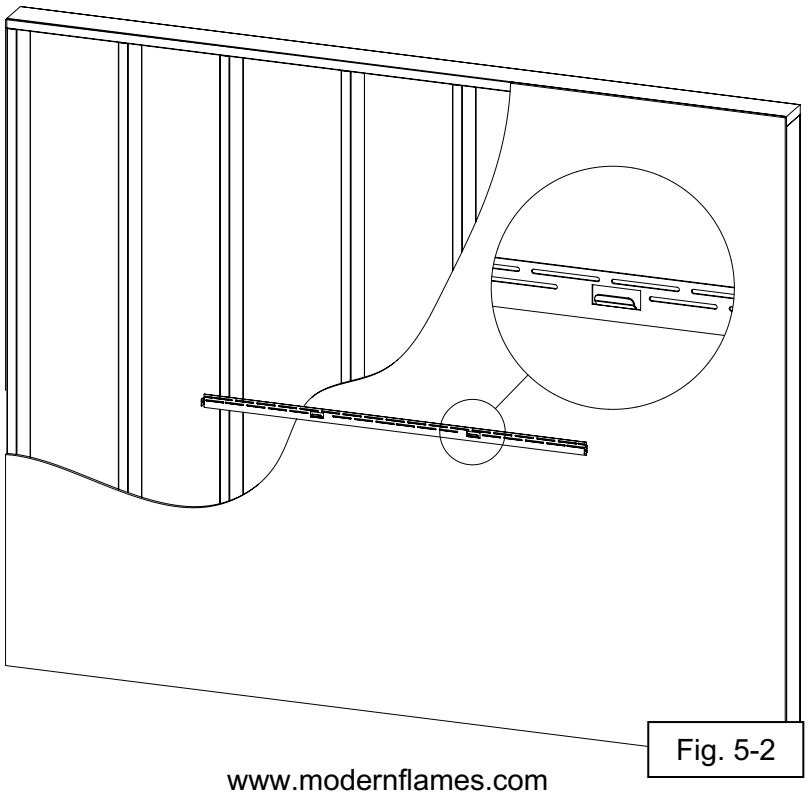

Fig. 5-2

Wall Mounted Installation (Continued)

- With the wall mounting bracket installed, have two people lift the appliance up and insert the two hooks of the wall bracket into the two receiver slots on the back of the appliance (Fig. 6-1).

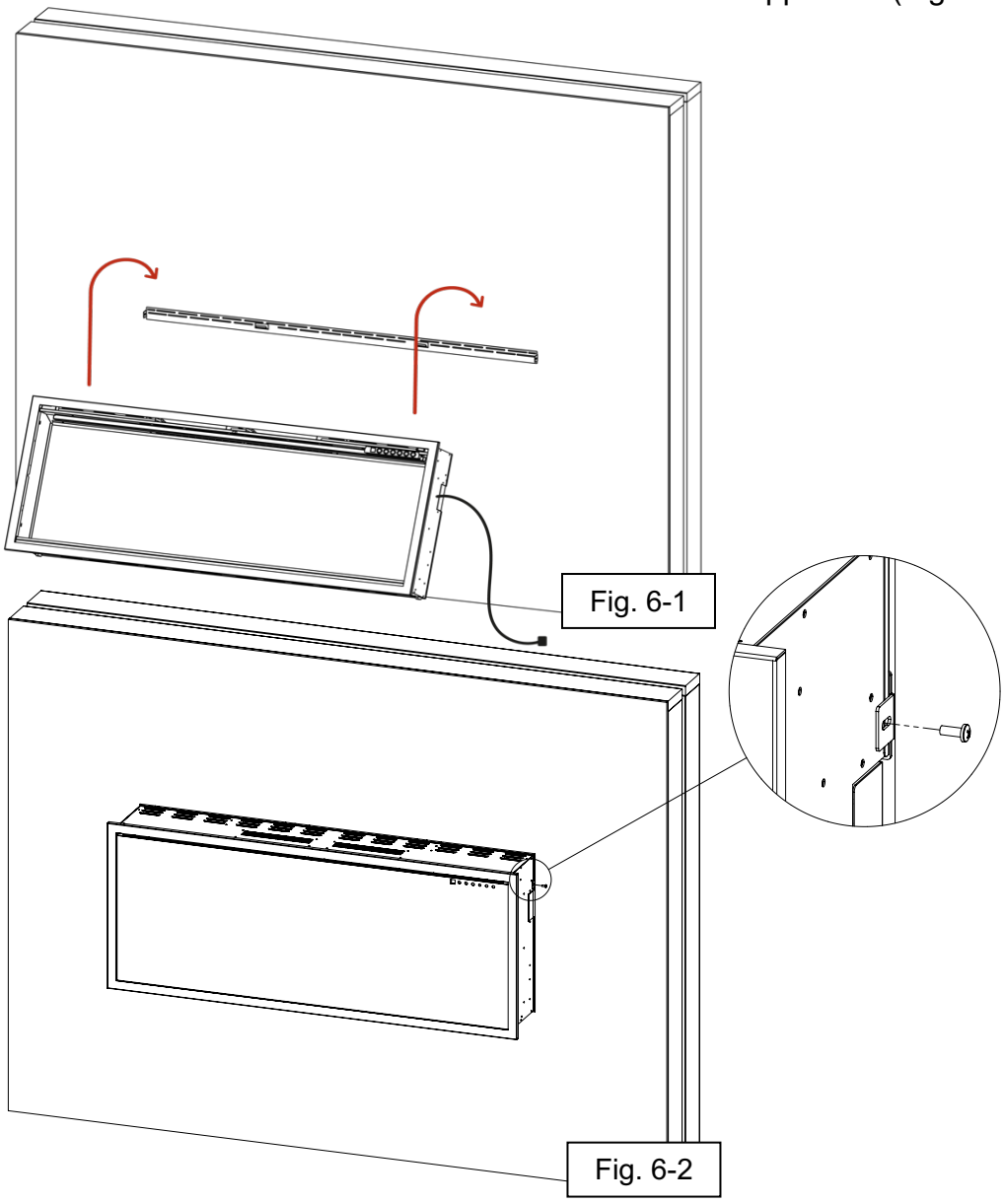

Fig. 6-1

Fig. 6-2

- Secure 2 smaller screws from the hardware kit (A), and install them to secure the fireplace to the wall mount bracket on the left and right hand sides. (Fig. 6-2)
- Check the appliance for stability, ensuring the bracket will not pull free from the wall.
- Install the side skirt panels (B) to each side of the firebox (Fig. 6-3).

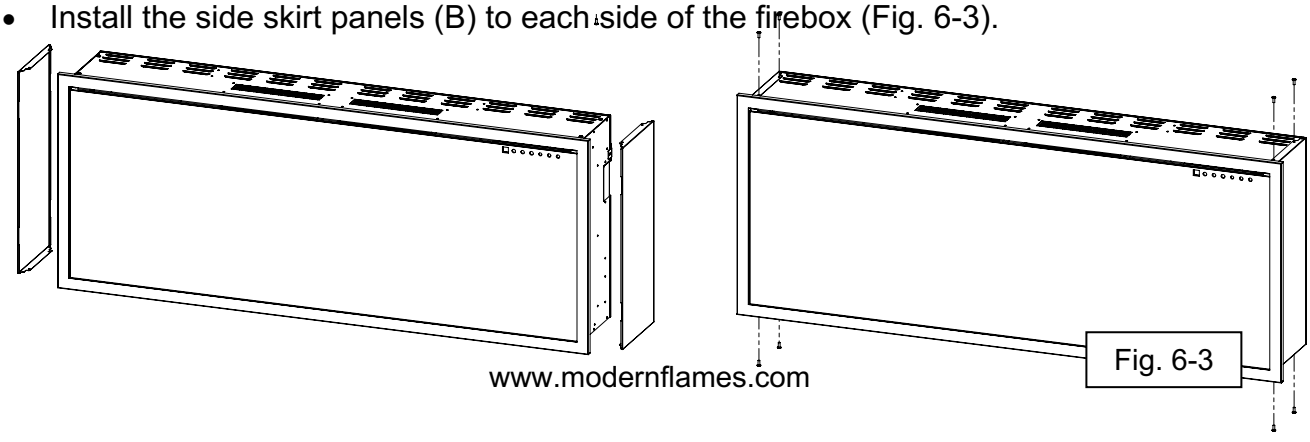

Fig. 6-3

Hardwiring Installation

120 Volt Power (5,000 BTU's):

If it is necessary to hardwire this appliance, a qualified electrician must remove the cord connection and wire the appliance directly to the household wiring.

Use a dedicated 15-amp minimum circuit. A 20-amp circuit is preferred.

The appliance must be electrically connected and grounded in accordance with local codes. In the absence of local codes, use the current CSA C22.1 Canadian Electrical Code in Canada or the current ANSI/NFPA 70 National Electrical Code in the USA.

TURN OFF POWER FROM CIRCUIT BREAKER FIRST

Note: There are 3 wires from the appliance junction box: white (neutral), black (power L1), and green (ground) that are connected to 120V power source (circuit breaker panel).

- Ensure that power from the circuit breaker is off.
- Remove the 2 securing screws from the junction box cover plate, located on the back left-hand side of the appliance (Fig. 7-1).
- Using a screwdriver, remove the existing power cable from the terminal block and store it in a safe place.
- If the strain relief is not already installed, install it into the junction box cover plate (Fig. 7-2). Slide the power supply wire through the strain relief.
- From the power supply wire, connect the green/bare copper wire to ground (**G**), the white wire to neutral (**N**), and the black wire to Line 1 (**L1**) (Fig. 7-3)
    i. L2 Terminal is for 240V only.
- Resecure the junction box cover plate using the 2 screws previously removed.

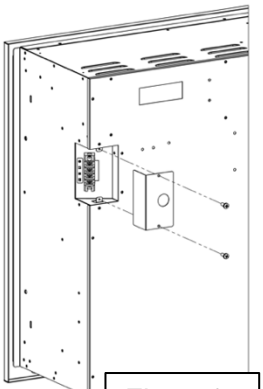

Fig. 7-1

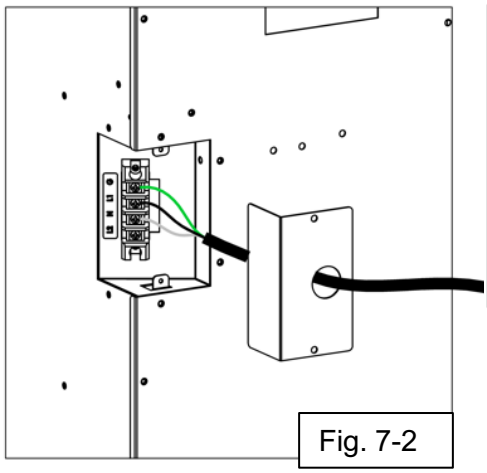

Fig. 7-2

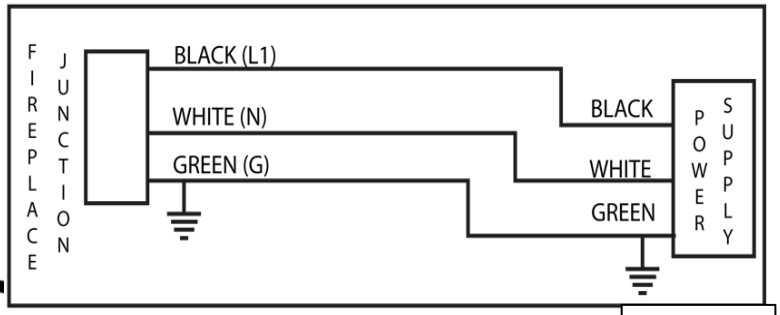

Fig. 7-3

Hardwiring Installation (Continued)

240 Volt Power (10,000 BTU's):

This fireplace is equipped with the ability to optionally wire with 240 volts, which will supply 10,000 BTU's of heat.

A dedicated 240V, split-phase, 15-amp circuit is required. A 20-amp circuit is preferred.

Note: All 4 terminals will be used in the appliance junction box: white (neutral), black (power L1), red (power L2), and green/bare (ground) that are connected to 240V power source (circuit breaker panel). 240V supply connection must include a neutral. Connection must be 4 wires (3 primary wires and a ground). L1 & L2 must be separate phases.

- Ensure that power from the circuit breaker is off.
- Remove the 2 securing screws from the junction box cover plate, located on the middle left-hand back-side of the appliance (Fig. 8-1).
- Using a screwdriver, remove the existing power cable from the terminal block and store in a safe place.
- If the strain relief is not already installed, install it into the junction box cover plate (Fig. 8-2). Slide the power supply wire through the strain relief.
- From the 4-wire, 240 volt power supply wire, connect the green/bare copper wire to ground (**G**), the white wire to neutral (**N**), the black wire to Line1 (**L1**), and the red wire to Line2 (**L2**) (Fig. 8-3).
- Resecure the junction box cover plate using the 2 screws previously removed.

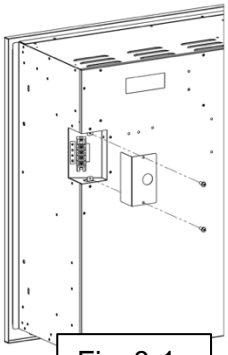

Fig. 8-1

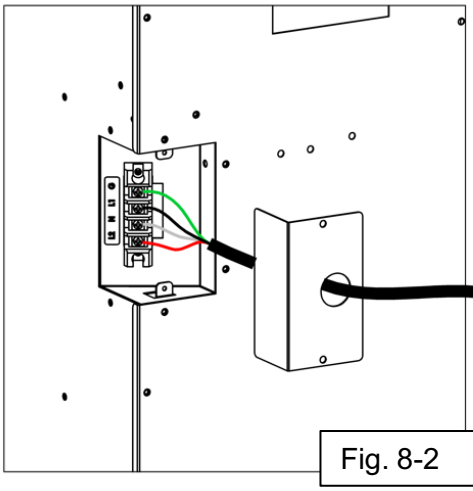

Fig. 8-2

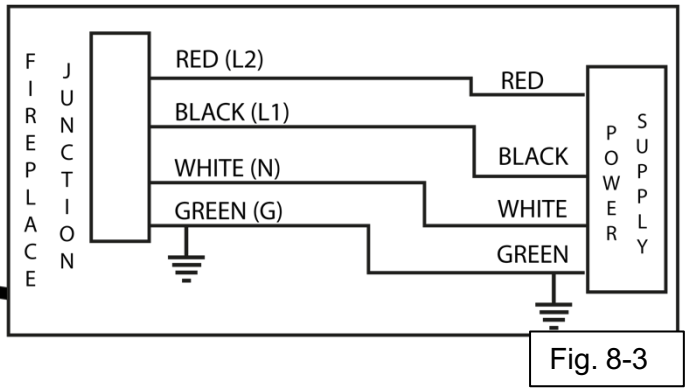

Fig. 8-3

Log Set and Crushed Glass Installation

- The front glass must be removed and the appliance must be mounted in its final location before the log set and crushed glass are installed.
- Install the log set into the fireplace by plugging the wired connector from the log set into the log set receiver. The log set receiver is located in the back, center, of the ember bed. Ensure careful alignment when plugging in the connector, as it can only be installed in one orientation (Fig. 9-1)
- After the log set has been installed, arrange the glass media on the ember bed so that the entirety of the acrylic ember bed is covered. Sprinkle the wood chips over the crushed glass as desired.
- Note: Ensure to avoid media falling into the channel used by the front glass. Media in that channel can prevent the front glass from being installed or cause damage to the front glass. Clear the channel by sliding the crushed glass along the channel until it falls into one of the cleanout slots.

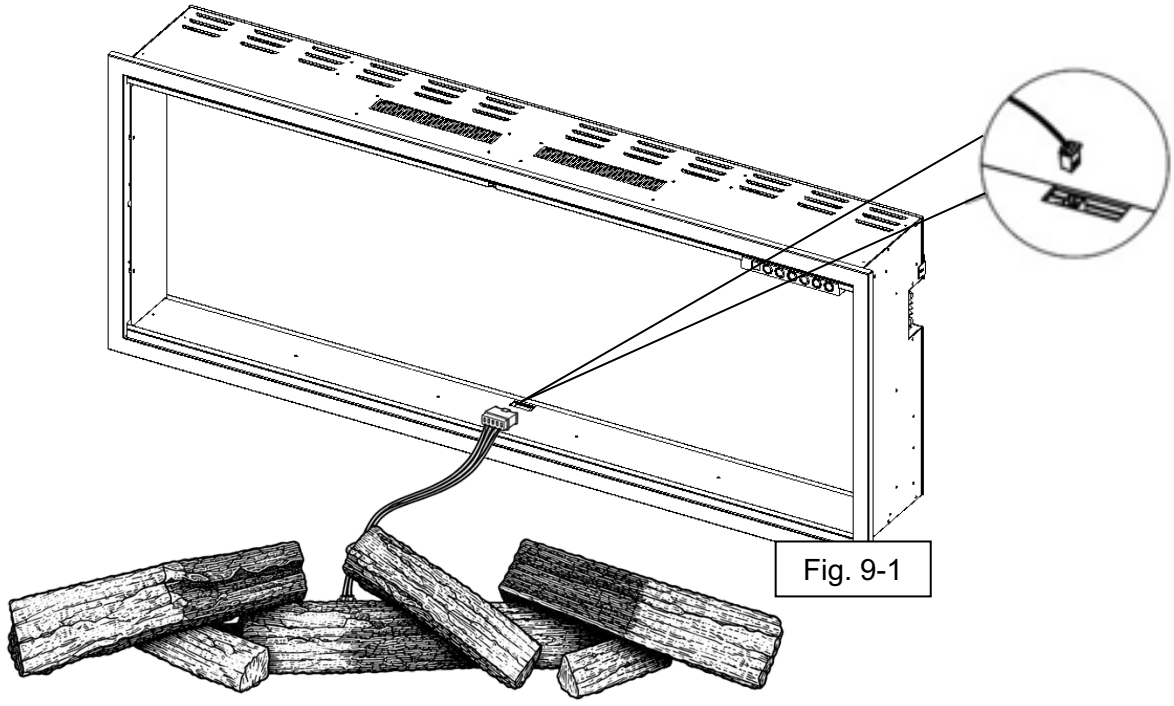

Fig. 9-1

Note: Log set image is for reference only. Actual log set layout will vary.

Operation

Read and understand this entire owner's manual, including all safety information, before plugging in or using this product. Failure to do so could result in electric shock, fire, serious injury, or death.

Master Power Switch

Located above the Touch Control Panel is the Master Power Switch. Ensure the rocker switch is pressed in the "On" position prior to operating the fireplace (Fig. 10-1).

Note: After resetting the Master Power Switch or from a loss of power, the fireplace can take up to 20-30 seconds before the fireplace is fully booted and operational.

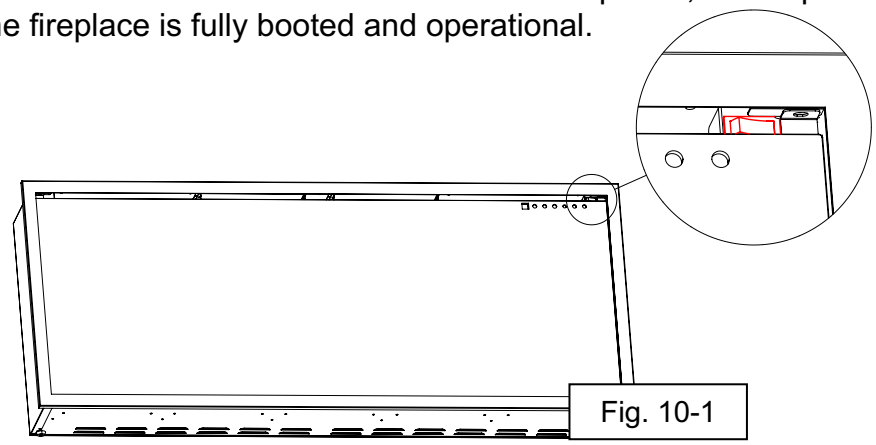

Fig. 10-1

Pairing the Remote

The remote is an IR remote control and does not need paired. For optimal performance when performing a function aim remote control to the front center of the fireplace.

Heater Output Selector

For applications in which the user desires to reduce or disable the heater functionality, a hidden push-button switch is located behind a small access panel in the ceiling of the viewing area, behind the front glass.

The available settings are:

- 02 = Full-Power Heating
  - 120 V = 1500 Watts Maximum
  - 240 V = 3000 Watts Maximum
- 01 = Half-Power Heating
  - 120 V = 750 Watts Maximum
  - 240 V = 1500 Watts Maximum
- 00 = Heating Disabled
  - 120 V = 0 Watts
  - 240 V = 0 Watts

Factory Default: 02 = Full-Power Heating

Operation (Continued)

Please read all steps before changing the configuration.

To access the push-button switch, remove the front glass. Locate and remove the screw securing the small access panel, then temporarily remove the access panel (See Fig.10-2). The access panel will be reinstalled after configuration is complete.

The switch is a latching/non-momentary switch and should normally remain in the released, or OPEN, position. To select the desired heater output, the fireplace must first be placed into Heater Output Configuration Mode.
Note: A switch cycle is: CLOSED > OPEN > CLOSED.

Entering Heater Output Configuration Mode

Press the push-button switch to place it in the CLOSED position and leave it in this position for 5 seconds.

After 5 seconds, the fireplace will enter Heater Output Configuration Mode and the display will show the currently stored setting:

02 = Full-Power Heating
01 = Half-Power Heating
00 = Heating Disabled

After entering Heater Output Configuration Mode, each additional switch cycle advances to the next available setting:
02 > 01 > 00 > 02

All actions must be performed while the display is illuminated. The display turns off after 5 seconds, if it has turned off you will have to re-enter the configuration mode to perform any changes.

Continue cycling the switch until the desired heater output setting is shown on the display.

When the desired setting is displayed, return the switch to the OPEN position.

If no additional switch input is detected for 5 seconds, the selected setting will be saved and the fireplace will exit Heater Output Configuration Mode.

The selected heater output setting is stored in memory and will be retained even after the fireplace is disconnected from power.

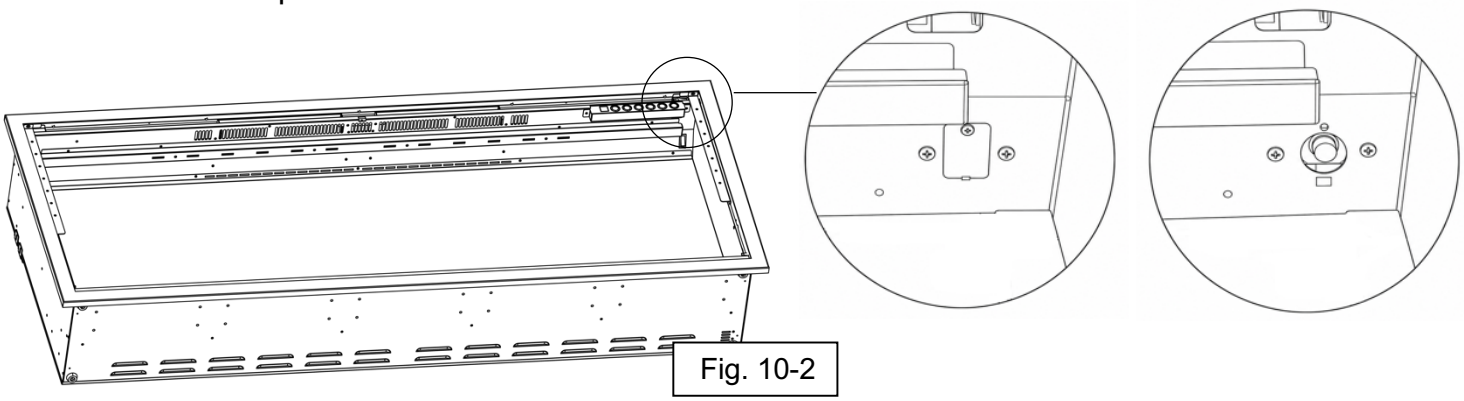

Fig. 10-2

Operation (Continued)

Sound Modes

The electric fireplace is equipped with an integrated audio system featuring multiple selectable sound modes to enhance the environmental realism.

- **Normal Mode** outputs a continuous, looped fire-crackling sound calibrated to simulate a natural burning fireplace.
- **Starry Night Mode** layers low-level ambient wind effects over the fire crackle, creating a broader sound field intended to replicate a calm nighttime outdoor environment.
- **Stormy Night Mode** utilizes the same fire and wind audio layers as Normal Mode, with the addition of intermittent thunder effects to produce a more dynamic and immersive sound profile.
- **Bluetooth Mode** enables wireless audio streaming from compatible smart devices, allowing users to route external music or audio content directly to the fireplace's built-in speaker system.
    - To pair a smart device to the fireplace, open the Bluetooth settings on the smart device.
    - Select the option to pair a new Bluetooth device.
    - Search the list of available devices, select "ModernFlames-XXXX" and follow the on-screen instruction on the smart device to complete pairing.
    - **Note:** The fireplace does not need to be in the Bluetooth Mode to pair with a smart device but it does need to be in the Bluetooth mode to stream music to the device.

Log Lighting

The fireplace features an illuminated log set that is synchronized with the ember bed lighting. The log set will display the same color and lighting mode as the ember bed. The log set lighting can also be turned off independently while the ember bed remains illuminated.

Ember Bed Lighting

The fireplace features an illuminated ember bed with multiple color and brightness settings. The ember bed can operate in a static mode or a breathing mode with three selectable speeds. The ember bed lighting is synchronized with the log set. Turning off the ember bed lighting will also turn off the log set lighting.

Operation (Continued)

Methods of Operation

This electric fireplace can be operated by the Touch Control Panel located on the upper right corner of the fireplace, the battery-powered Remote Control, or the Modern Flames App using a smart phone or tablet.

Touch Control Panel

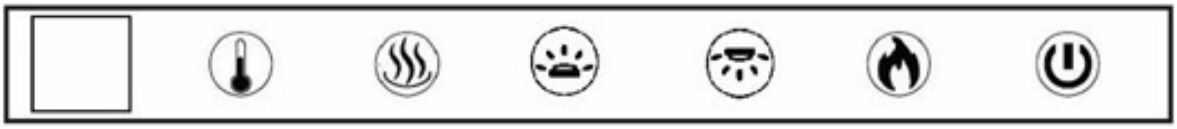

Remote Control



Modern Flames App

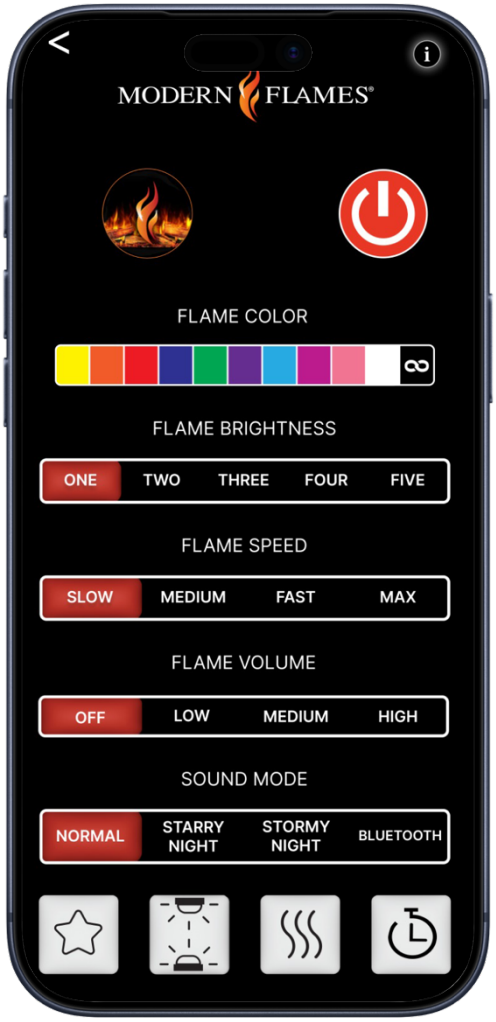

Operation – Touch Control Panel

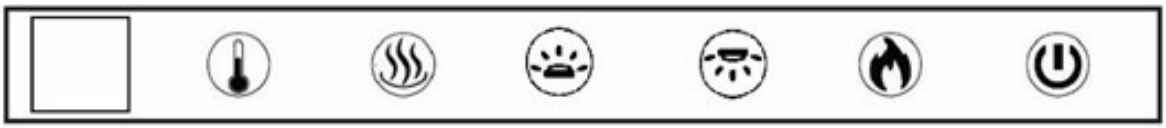

Touch Panel Operation

Button	Function	Action
	ON: Enables control panel functions. Turns on the flame. **OFF:** Disables control panel functions. Turns off the flame.	**1. Press once:** The indicator light turns on. Power turns on. All functions enabled. **2. Press again:** Flame turns off. Unit goes to standby. All functions turn off.
	FLAME BUTTON: Changes between flame presets. **NOTE:** Color effect stays on until the power button is turned off. This fireplace has a memory function for flame presets.	**1. Press once:** Cycles the flame color. **2. Press again** until the desired color is reached. there are a total of 10 preset colors and one autocycle. **NOTE:** Press and hold for 5 seconds to start connecting with the App.
	DOWNLIGHT BUTTON: Cycles downlight colors. **NOTE:** Downlight color effect stays on until power button is turned off. This fireplace has memory function for down light settings.	**1. Press once:** Cycles the downlight color. **2. Press again** until the desired color is reached. In total ten colors and one autocycle. 01-02-03-04-05-06-07- 08-09-10-11 (off). **NOTE:** Press and hold for 5 seconds to turn on/off night light mode.
	EMBER BED BUTTON: Cycles the ember bed colors. **NOTE:** Ember bed color effect stays on until power button is turned off. This fireplace has a memory function for ember bed settings. The log set is synchronized to the ember bed settings. Changing the ember bed also changes the logs.	**1. Press once:** Cycles the ember bed color. **2. Press again** until the desired color is reached. In total ten colors and one autocycle. 01-02-03-04-05-06-07- 08-09-10-11 (off). **NOTE:** Press and hold for 5 seconds to turn the logs/auxiliary on and off.
	HEATER BUTTON: Turns the heater and fan on and off. **NOTE:** The heater only works when the flame is on. If the flame is off, the heater will not turn on. **NOTE:** To prevent overheating, the heater fan will blow cool air for 8-10 seconds after the heater turns off.	**1. Press once:** Turns the heater and fan on. **2. Press again** until it cycles through the heater settings. Settings: **H0** - Heater and fan off **F** – Fan only **H1** - Low Heater **H2** - High Heater **NOTE:** Press and hold the heater button for 5 seconds to lock/unlock the heater and thermostat. **H0** will be displayed and flashed when locked.
	THERMOSTAT BUTTON: Turns the heater on / off to maintain room at the selected temperature. **NOTE:** Press the button for 5 seconds to switch between **°C** and **°F.**	**1. Press once:** Cycles through the preset thermostat values. **2. Press again** until desired temperature is reached. **F** or **C** will be displayed when the thermostat is off. Available thermostat values:

NO	0	1	2	3	4	5	6	7	8	9	10	NO
°C	20	21	22	23	24	25	26	27	28	29	30	°C
°F	68	70	72	74	76	78	80	82	84	86	88	°F

Operation – Remote Control



Remote Control Operation

Button	Function	Action
1	**On:** Enables control panel functions. Turns on the flame. **Off:** Disables control panel functions. Turns off the flame.	**1. Press once:** The indicator light turns on. Power turns on. All functions enabled. **2. Press again:** Flame turns off. The unit goes to standby. All functions turn off.
2	**Default Button:** Returns the fireplace to the default color settings.	**Press once:** Flame color changes to Modern Flames yellow/orange, ember bed to orange and medium active mode. The downlight changes to orange. The flame speed changes to default, the sound mode to normal and medium sound level.
3	**Flame Color:** Cycles between the different flame color presets.	**1. Press once:** Flame switches to the next flame color preset in the sequence. **2. Press again** until the desired color preset is reached. In total, 10 colors and 1 autocycle.

Button	Function	Action
4	**Flame Controls** **∧:** Increases the brightness of the flame **∨:** Decreases the brightness of the flame **>:** Increases the flame speed **<:** Decreases the flame speed	**Flame Speed** **1. Press ∧ once** increases the brightness level of the flame **Press ∧ again** until the desired brightness is reached. In total, five levels are available. **2. Press ∨ once** decreases the brightness level of the flame. **Press ∨ again** until the desired brightness is reached. In total, five levels are available **3. Press > once** to change to the next flame speed. **Press > again** until the desired flame speed is selected. In total, four speeds are available. **4. Press < once** to change to the next flame speed. **Press < again** until the desired flame speed is selected. In total, four speeds are available.
	Downlight mode: **∧:** Increases the brightness of the downlight **∨:** Decreases the brightness of the downlight **>:** Cycles the color of the downlight **<:** Cycles the color of the downlight	**Downlight Mode:** **1. Press ∧ once** increases the brightness of the downlight. **Press ∧ again** until the desired brightness is reached. In total, five brightness levels are available. **2. Press ∨ once** decreases the brightness of the downlight. **Press ∨ again** until the desired brightness is reached. In total, five brightness levels are available. **D4 - D3 - D2 - D1 - D0** (off). **3. Press > once** to change to the next downlight color. **Press > again** until the desired downlight color is selected. In total, ten colors and one fade mode are available. **4. Press < once** to change to the next flame color. **Press < again** until the desired downlight color is selected. In total, ten colors and one autocycle mode are available. **01-02-03-04-05-06-07-08-09-10-11**
	Ember Bed mode: **∧:** Increases the brightness of the ember bed **∨:** Decreases the brightness of the ember bed **>:** Cycles the color of the ember bed **<:** Cycles the color of the ember bed Note the log set is synchronized to the ember bed settings. Changing the ember bed also changes the logs.	**Ember Bed Mode:** **1. Press ∧ once** increases the brightness of the ember bed and log set. **Press ∧ again** until the desired brightness is reached. In total, five brightness levels are available. **2. Press ∨ once** decreases the brightness of the ember bed and log set. **Press ∨ again** until the desired brightness is reached. In total, five brightness levels are available. **E4 - E3 - E2 - E1 - E0** (off). **3. Press > once** to change to the next ember bed color. **Press > again** until the desired ember bed color is selected. In total, ten colors and a fade mode are available. **4. Press < once** to change to the next flame color. **Press < again** until the desired ember bed color is selected. In total, ten colors and one autocycle mode are available. **01-02-03-04-05-06-07-08-09-10-11**

Button	Function	Action
	Extras mode: **∧:** Changes the ember bed mode **∨:** Changes the ember bed mode **>:** Cycles the preset of the selected favorites **<:** Cycles the preset of the selected favorites Note ember bed mode changes also apply to the log set and cannot be independently controlled.	**Extras mode:** **1. Press ∧ once** to change the next ember bed and log set effect. **Press ∧ again** until the desired effect is reached. In total, 4 settings are available. **2. Press ∨ once** to change to the next ember bed effect. **Press ∨ again** until the desired effect is reached. In total, 4 settings are available. Available settings: 01 – Breathing, Slow 02 – Breathing, Medium 03 – Breathing, Fast 04 – Static **3. Press > once** to change to the next flame preset in the favorite's carousel. **Press > again** until the desired flame preset is selected. In total, six presets are available in the favorite's carousel. **4. Press < once** to change to the next flame preset in the favorite's carousel. **Press < again** until the desired flame preset is selected. In total, six presets are available in the favorite's carousel. **Note:** Favorites can only be set up via the fireplace controls in the Modern Flames app. Favorites will present as F1 - F6.
5	**Ember Bed Button:** Enables the ember bed mode of the remote. Indicator light (See No. 6) turns on above the ember bed button to indicate the remote is on ember bed mode. **Note**: This fireplace has a memory function for the ember bed settings and will return to the previously used color when the fireplace is turned back on.	**1. Press once:** Cycles ember bed. **2. Press again:** Indicator light turns off. Toggles ember bed off. **Note:** Press and hold for 5 seconds to turn ON/OFF the log set.
6	**Indicator Light:** Shows the operator what mode is selected when using the cursor buttons.	**Note:** Indicator Light above downlight: Cursor controls of the downlight enabled. Indicator Light above ember bed: Cursor controls of the ember bed enabled. Indicator Light above ember bed: Cursor controls of the extras mode or ember bed mode (long press) enabled.

Button	Function	Action
7	**Downlight Button:** Enables the downlight mode of the remote. Indicator light (See No. 6) turns on above the downlight button to indicate the remote is on downlight mode. **Note**: This fireplace has a memory function for the downlight settings and will return to the previously used color when the fireplace is turned back on.	**1. Press once:** Cycles downlight. **2. Press again:** Indicator light turns off. Toggles downlight mode off. **Note:** Long press (5 seconds) of the downlight button will enable Night Light mode. All features of the fireplace turn off except for the downlight. Long press again to resume normal fireplace operations.
8	**Extras Button:** Enable the extras mode of the remote. Indicator light (See No. 6) turns on above the extras button to indicate remote is on extras mode.	**1. Press once:** Indicator light turns on. Toggles extras mode on. See No. 4 **2. Press again:** Indicator light turns off. Toggles extras mode off.
9	**Volume Button:** Changes the sound effect volume of the fireplace between 4 different volumes. Can cycle between **OFF**, **LOW**, **MEDIUM**, **HIGH.**	**1. Press + once:** Cycles up through the volume levels. **2. Press – once:** Cycles down through the volume settings. Volume settings: S0 – Off S1 – Low S2 – Medium S3 – High
10	**Heater Button:** Turns the heater and fan on and off. **Note:** The heater only works when the flame is on. If the flame is off, the heater will not turn on. **Note:** To prevent overheating, the heater fan will blow cool air for 8-10 seconds after the heater turns off.	**1. Press once:** Turns the heater and blower on. **2. Press again** cycles thru the heater settings. Heater Settings: H0 – Heater and fan off F – Fan only H1 – Low Heater H2 – High Heater **Note:** Press and hold the heater button for 5 seconds to lock/unlock the heater and thermostat. H0 will flash when locked
11	**Thermostat Button:** Changes the thermostat value of the fireplace, enabling or disabling the heater at the set temperature.	**1. Press + Once:** Cycles up through the thermostat values until the desired temperature is selected. **2. Press – Once:** Cycles down through the thermostat values until the desired temperature is selected. "**Note:** Long press (5 seconds) to switch between **°C** and **°F**. **Note: F** or **C** will be displayed when the thermostat is off."
12	**Sound Mode Button:** Changes the sound mode of the fireplace. Cycles between Normal, Starry Night, Stormy Night, and Bluetooth.	**1. Press once:** Changes the current sound mode to the next available sound mode. **2. Press again** until the desired sound mode is selected. Sound mode settings: B0 – Normal - Normal fireplace crackling. B1 – Starry Night – Normal sound mode with additional wind sounds. B2 – Stormy Night – Starry Night sound mode with additional thunder sounds. B3 – Bluetooth – Allows for streaming music from a smart device to the fireplace.

Smart Phone App Connection

Download the Modern Flames App from your app store before connecting.

Download on the App Store

GET IT ON Google Play

MODERN FLAMES ELECTRIC FIREPLACES

Scan to download mobile app

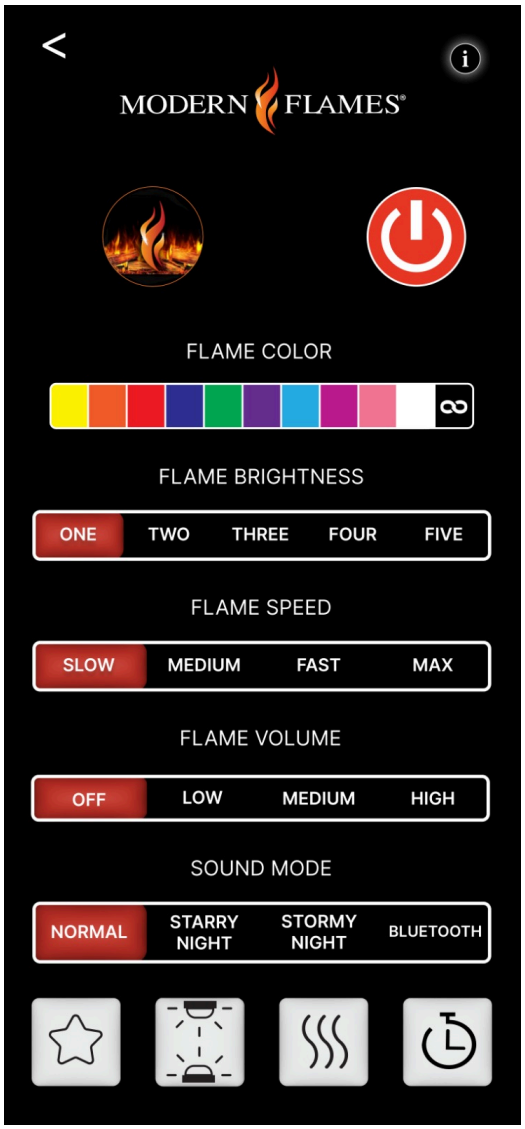

Wi-Fi – Initial Log-in

- Search for and install the “Modern Flames” app from the Google Play or Apple App Store.

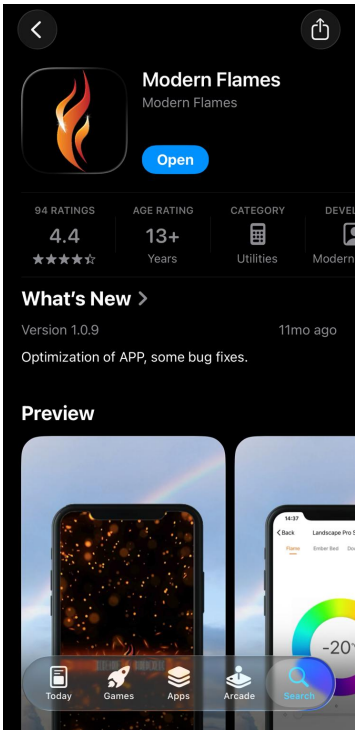

- After the App is installed, log in to the Modern Flames App. Must have Wi-Fi and Bluetooth enabled on the smart device.
- Once opened from the home page, select the “Add Fireplaces” button.

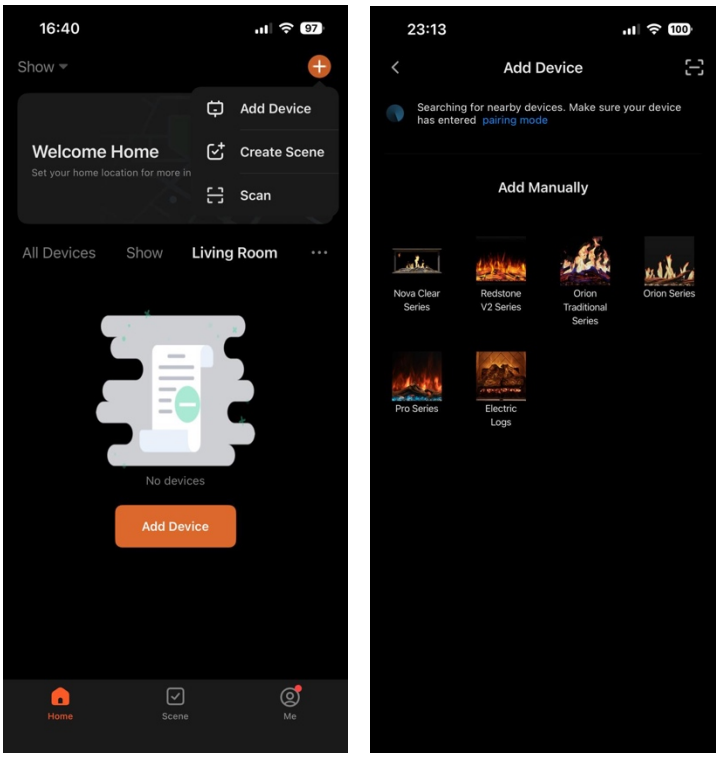

Wi-Fi – Pairing

Auto Scan

- The App will automatically start to scan for nearby fireplaces.
- On the fireplace touch controls, press and hold the “Flame” button for 5 seconds. The fireplace will show either “P0” or “P2”. This will place the fireplace in pairing mode.

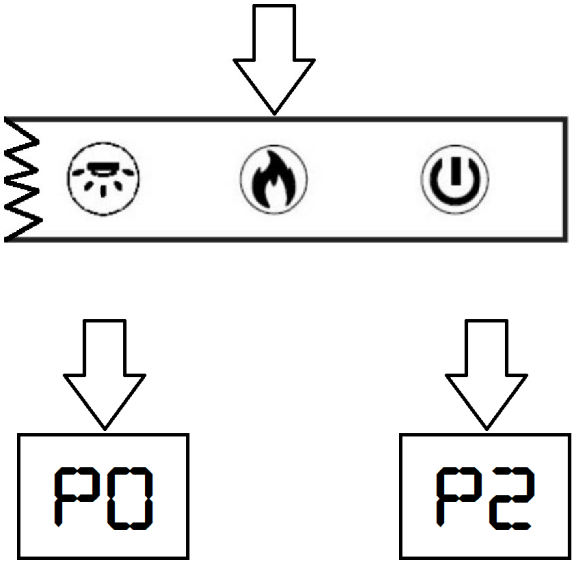

Wi-Fi – Pairing (Continued)

- Auto scan will search for available devices. Upon finding the available fireplace, select the “Add” button if the app does not proceed automatically. If the scan fails to find a fireplace, press and hold the “Flame” button on the manual touch controls to switch pairing modes. Holding the flame button for 10 seconds will switch the pairing modes.

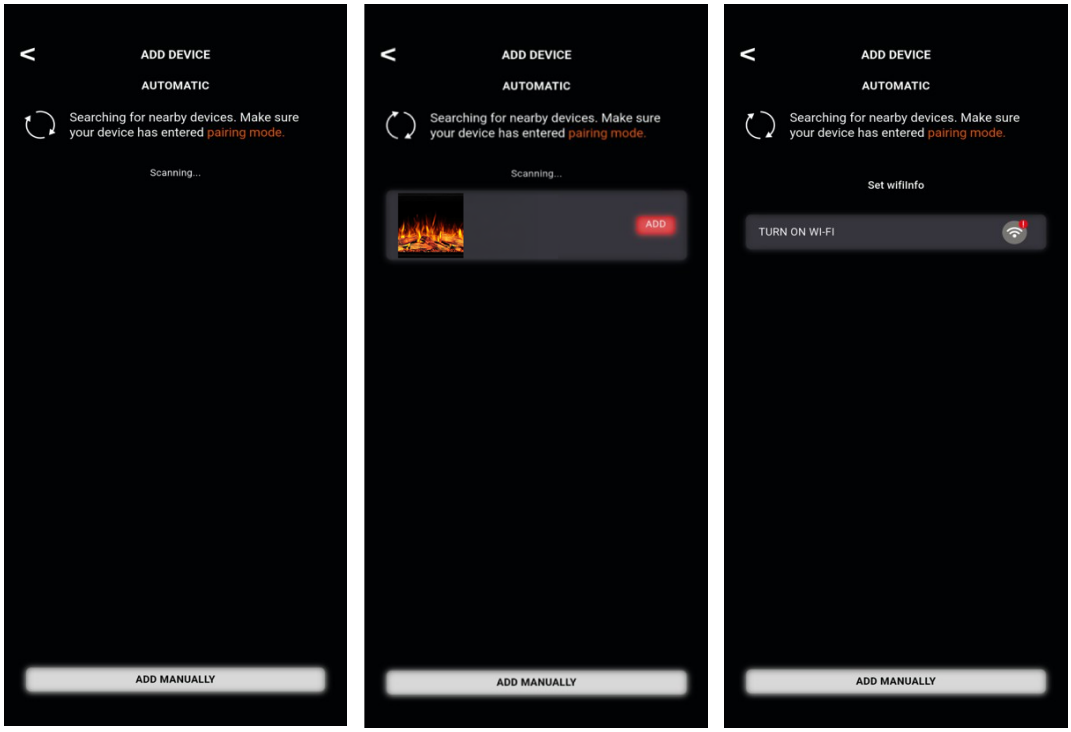

- Enter in the Wi-Fi information. The information must be entered to be able to proceed to the next step.
- The app will begin connecting. The fireplace will beep repeatedly during the pairing process.

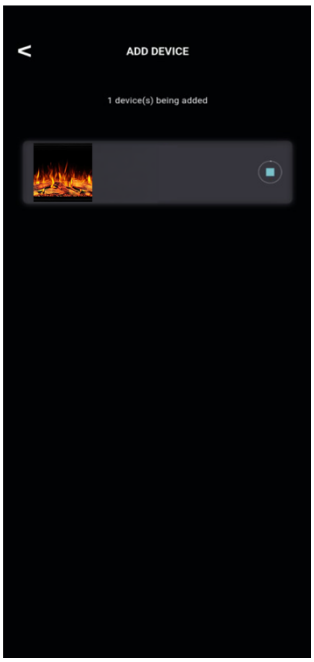

Wi-Fi – Pairing (Continued)

- The fireplace display will show “P4” and the downlight LEDs will blink green on a successful pair. The fireplace name may be changed at this time by selecting the Pencil Icon.
    i. NOTE: Do not turn OFF or disconnect the fireplace from power while pairing the Wi-Fi or performing updates. Failure to do so can result in damage to electrical components of the fireplace. Damage as a result of this may not be covered under warranty.

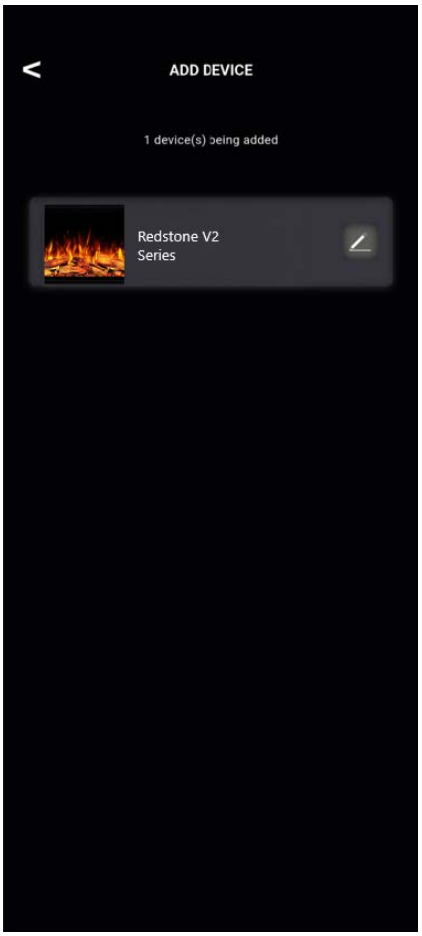

Wi-Fi – Pairing (Continued)

Manual Connect

- Select the "Add Manually" button at the bottom of the page and follow the instructions in the app.

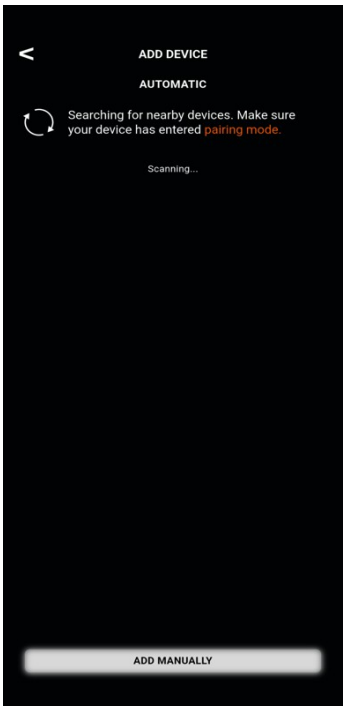

- When pairing via Wi-Fi, the 2.4 GHz Wi-Fi signal must be used. Ensure the appropriate login information is entered before continuing to the next step.

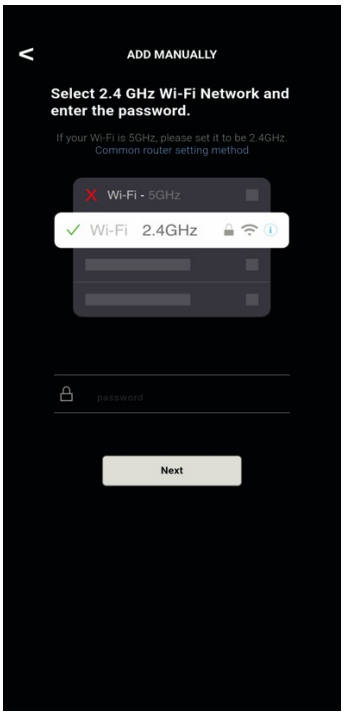

Wi-Fi – Pairing (Continued)

- Hold the “Flame” button on the manual touch controls for 5 seconds. The top right of the app allows switching between Bluetooth Mode and Access Point (AP) Mode.
    i. In Bluetooth Mode, the fireplace will display “P0”.
    ii. In AP Mode, the fireplace will display “P2”
    iii. Holding the flame button for an additional 5 seconds will cycle the fireplace between Bluetooth Mode and AP Mode. This allows Bluetooth devices to more easily pair to the fireplace.

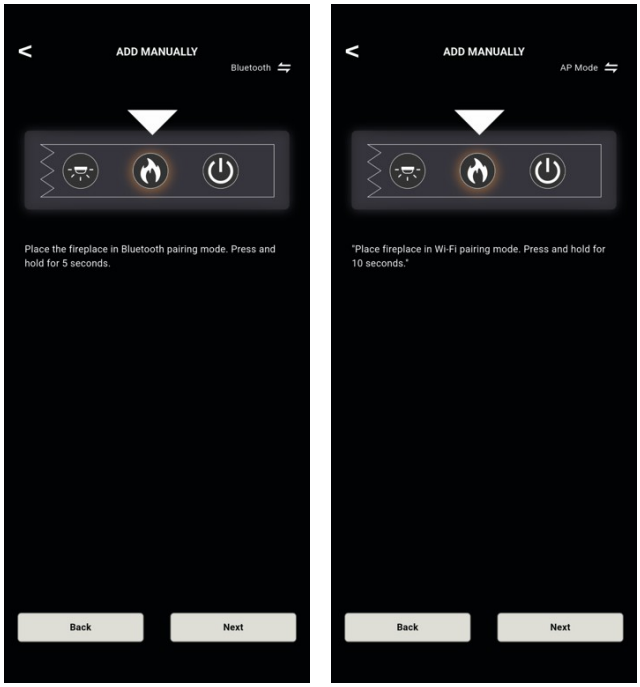

- The device and app should now begin to pair. Depending on the Wi-Fi signal, this can take up to two minutes to pair and may need to be repeated more than once.

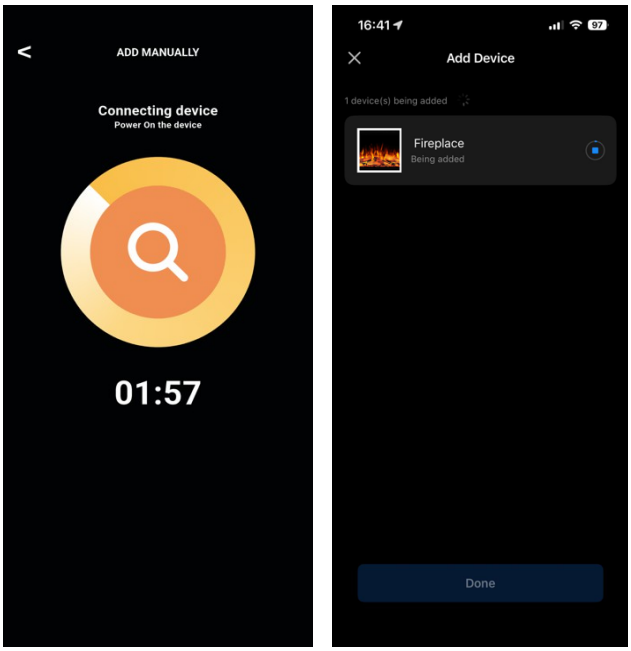

Wi-Fi – Pairing (Continued)

- The fireplace display will show “P4” and the downlight LEDs will blink green on a successful pair. The fireplace name may be changed at this time by selecting the Pencil Icon.
    i. NOTE: Do not turn OFF or disconnect the fireplace from power while pairing the Wi-Fi or performing updates. Failure to do so can result in damage to electrical components of the fireplace. Damage as a result of this may not be covered under warranty.

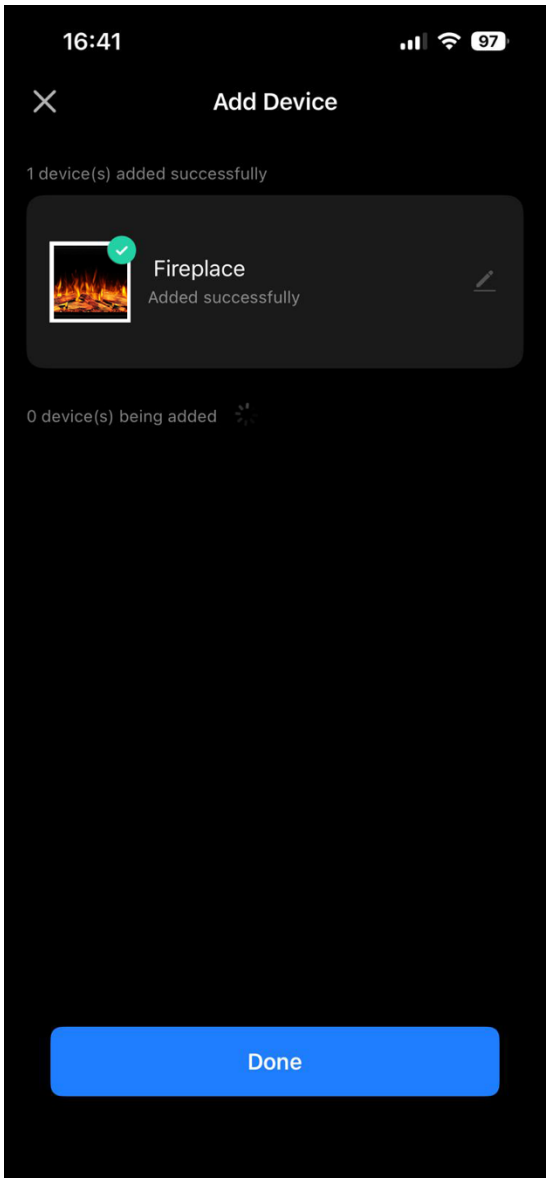

Smart Device App

For more information on the fireplace app,
visit **https://www.modernflames.com/**

Operation – Important Warnings

Note:
When the heater is first turned on, a slight odor may be present. This is normal and should not occur again unless the heater is not used for a long period of time.
To improve operation, aim the remote control at the front of the fireplace. Quickly pressing buttons on the remote without allowing the fireplace to complete the previous operation may result in operational errors. Allow the fireplace to complete each command before issuing another.

Remote Control Battery Information

- The remote control uses two AAA batteries (included).



Never dispose of batteries in a fire. Failure to observe this precaution may result in an explosion. Dispose of batteries at your local hazardous material processing center.

Installing or Replacing the Remote Control Batteries

- Looking at the back of the remote, locate the removable battery compartment door.
- Gently slide the battery door downward, toward the bottom edge of the remote.
- If replacing the batteries, remove the old batteries and dispose of them in accordance with local regulations.
- Insert the supplied batteries or new AAA batteries, ensuring the “+” and “–” ends align with the markings inside the battery compartment.
- Replace the battery door by sliding it back into position from the bottom of the remote.

Temperature Limiting Control

This heater is equipped with a Temperature Limiting Control. Should the heater reach an unsafe temperature, the heater will automatically turn Off.

To Reset:

- Remove power from the fireplace. Wait 5 minutes.
    - Unplug the fireplace or turn off the appropriate breaker at the circuit breaker box.
- Inspect the fireplace to ensure no vents are blocked or clogged with dust or lint. Using a vacuum can help clear the areas if needed.
- Apply power to the fireplace.
- If the problem continues, have the wiring and outlet inspected by a professional.

Care – Cleaning



Always turn heater OFF and unplug power cord from the outlet before cleaning, performing maintenance, or moving this fireplace. Failure to do so could result in electric shock, fire, or personal injury.

Never immerse in water or spray with water. Doing so could result in electric shock, fire, or personal injury.

Metal:

- Clean using a soft cloth, slightly dampened with soapy water.
- DO NOT use a brass polish or household cleaners as these products will damage the metal trim.

Glass:

- Use an ammonia-free glass cleaner sprayed onto a cloth or towel. Dry thoroughly with a paper towel or lint-free cloth.
- DO NOT use abrasive cleansers, liquid sprays, or any cleaner that could scratch the surface.

Vents:

- Use a vacuum or duster to remove dust and dirt from the heater and vent areas.

Plastic:

- Wipe gently with a slightly damp cloth and a mild solution of dish soap and warm water.
- DO NOT use abrasive cleaners, liquid sprays, or any cleaner that could scratch the surface.

Electrical and Moving Parts:

- The fan motors are lubricated at the factory and do not require additional lubrication.
- Electrical components are integrated into the fireplace and are not serviceable by the consumer.

Storage:

- Store the fireplace in a clean, dry place when not in use.

Replacement Parts List

REF.	SPARE PARTS, PART NUMBERS	RS53-Linear-V2	RS62-Linear-V2	RS78-Linear-V2	RS102-Linear-V2
1	Motor, DC, Spindle	01-00355			
2	Heater, PTC	01-00139			
3	Blower, PTC	01-00318			
4	Glass, Front	04-00084	04-00085	04-00086	04-00087
5	Glass, Inside	04-00088	04-00089	04-00090	04-00091
6	LED Strip, Ember Bed	01-00279			
7	LED Strip, Downlight	01-00281			
8	LED Strip, Flame Light	01-00356			
9	Touch Controls, 6 Button	01-00109			
10	Speaker (with wire)	01-00357			
11	NTC (Thermostat)	N/A			
12	Rocker Switch, Main Power On/Off	01-00113			
13	Rocker Switch, Heater Lockout	01-00263			
14	PCB, Main Board	01-00358			
15	PCB, EMI Board	01-00269			
16	PCB, Protector Board	01-00268			
17	PCB, Power Board	01-00267			
18	PCB, Audio	01-00359			
19	PCB, IR Receiver	01-00360			
20	PCB, Lit Log Receiver	01-00361			
21	Log Set	05-00276	05-00277	05-00278	05-00279
22	Acrylic, Ember Bed Strip, Textured	03-00122	03-00123	03-00124	03-00125
23	Acrylic, Flame Screen	03-00126	03-00127	03-00128	03-00129
24	Remote	01-00362			
27	Snap Disc	N/A			

DO NOT RETURN TO STORE!



CALL US FIRST

For immediate help with installation, product information or if your product arrives damaged, please call our toll-free number at:

1-877-246-9353

(Monday – Friday, 8:00AM – 5:00PM, AZ Mountain Time)

Or email us at:
customerservice@modernflames.com

OUR STAFF IS READY TO PROVIDE ASSISTANCE

RPG BRANDS

RPG BRANDS FAMILY OF COMPANIES

MODERN FLAMES ELECTRIC FIREPLACES · WILDFIRE OUTDOOR LIVING · GRAND CANYON GAS LOGS · SUMMIT® OPEN LUXURY FIREPLACES

www.modernflames.com

Copyright © 2026 RPG Brands (Modern Flames). All rights reserved. Products and specifications subject to change without notice. The product images shown are for illustration purposes only and may not be an exact representation of the product.

07-00238
20260818